ICS 19.100 SLOVENSKÁ TECHNICKÁ NORMA Marec 2021

STN	**Nedeštruktívne skúšanie Štandardné skúšobné metódy na stanovenie vnútorného pnutia neutrónovou difrakciou (ISO 21432: 2019)**	**STN EN ISO 21432** 01 5074

Non-destructive testing - Standard test method for determining residual stresses by neutron diffraction (ISO 21432:2019)

Táto norma obsahuje anglickú verziu európskej normy.
This standard includes the English version of the European Standard.

Táto norma bola oznámená vo Vestníku ÚNMS SR č. 02/21

Obsahuje: EN ISO 21432:2020, ISO 21432:2019

132397

Úrad pre normalizáciu, metrológiu a skúšobníctvo Slovenskej republiky, 2021
Slovenská technická norma a technická normalizačná informácia je chránená zákonom č. 60/2018 Z. z. o technickej normalizácii.

EUROPEAN STANDARD

NORME EUROPÉENNE

EUROPÄISCHE NORM

EN ISO 21432

September 2020

ICS 19.100

Supersedes CEN ISO/TS 21432:2005

English Version

Non-destructive testing - Standard test method for determining residual stresses by neutron diffraction (ISO 21432:2019)

Essais non destructifs - Méthode normalisée de détermination des contraintes résiduelles par diffraction de neutrons (ISO 21432:2019)

Zerstörungsfreie Prüfung - Standardprüfverfahren zur Bestimmung von Eigenspannungen durch Neutronenbeugung (ISO 21432:2019)

This European Standard was approved by CEN on 31 August 2020.

This European Standard was corrected and reissued by the CEN-CENELEC Management Centre on 21 October 2020.

CEN members are bound to comply with the CEN/CENELEC Internal Regulations which stipulate the conditions for giving this European Standard the status of a national standard without any alteration. Up-to-date lists and bibliographical references concerning such national standards may be obtained on application to the CEN-CENELEC Management Centre or to any CEN member.

This European Standard exists in three official versions (English, French, German). A version in any other language made by translation under the responsibility of a CEN member into its own language and notified to the CEN-CENELEC Management Centre has the same status as the official versions.

CEN members are the national standards bodies of Austria, Belgium, Bulgaria, Croatia, Cyprus, Czech Republic, Denmark, Estonia, Finland, France, Germany, Greece, Hungary, Iceland, Ireland, Italy, Latvia, Lithuania, Luxembourg, Malta, Netherlands, Norway, Poland, Portugal, Republic of North Macedonia, Romania, Serbia, Slovakia, Slovenia, Spain, Sweden, Switzerland, Turkey and United Kingdom.

EUROPEAN COMMITTEE FOR STANDARDIZATION
COMITÉ EUROPÉEN DE NORMALISATION
EUROPÄISCHES KOMITEE FÜR NORMUNG

CEN-CENELEC Management Centre: Rue de la Science 23, B-1040 Brussels

© 2020 CEN All rights of exploitation in any form and by any means reserved worldwide for CEN national Members.

Ref. No. EN ISO 21432:2020 E

Contents

Page

European foreword **3**

European foreword

The text of ISO 21432:2019 has been prepared by Technical Committee ISO/TC 135 "Non-destructive testing" of the International Organization for Standardization (ISO) and has been taken over as EN ISO 21432:2020 by Technical Committee CEN/TC 138 "Non-destructive testing" the secretariat of which is held by AFNOR.

This European Standard shall be given the status of a national standard, either by publication of an identical text or by endorsement, at the latest by March 2021, and conflicting national standards shall be withdrawn at the latest by March 2021.

Attention is drawn to the possibility that some of the elements of this document may be the subject of patent rights. CEN shall not be held responsible for identifying any or all such patent rights.

This document supersedes CEN ISO/TS 21432:2005.

According to the CEN-CENELEC Internal Regulations, the national standards organizations of the following countries are bound to implement this European Standard: Austria, Belgium, Bulgaria, Croatia, Cyprus, Czech Republic, Denmark, Estonia, Finland, France, Germany, Greece, Hungary, Iceland, Ireland, Italy, Latvia, Lithuania, Luxembourg, Malta, Netherlands, Norway, Poland, Portugal, Republic of North Macedonia, Romania, Serbia, Slovakia, Slovenia, Spain, Sweden, Switzerland, Turkey and the United Kingdom.

Endorsement notice

The text of ISO 21432:2019 has been approved by CEN as EN ISO 21432:2020 without any modification.

INTERNATIONAL STANDARD

ISO 21432

First edition
2019-12

Non-destructive testing — Standard test method for determining residual stresses by neutron diffraction

Essais non destructifs — Méthode normalisée de détermination des contraintes résiduelles par diffraction de neutrons

Reference number
ISO 21432:2019(E)

© ISO 2019

COPYRIGHT PROTECTED DOCUMENT

© ISO 2019

All rights reserved. Unless otherwise specified, or required in the context of its implementation, no part of this publication may be reproduced or utilized otherwise in any form or by any means, electronic or mechanical, including photocopying, or posting on the internet or an intranet, without prior written permission. Permission can be requested from either ISO at the address below or ISO's member body in the country of the requester.

ISO copyright office
CP 401 • Ch. de Blandonnet 8
CH-1214 Vernier, Geneva
Phone: +41 22 749 01 11
Fax: +41 22 749 09 47
Email: copyright@iso.org
Website: www.iso.org

Published in Switzerland

Contents

Page

Foreword ..... **v**
Introduction ..... **vii**
1 Scope **1**
2 Normative references **1**
3 Terms and definitions **1**
4 Symbols and abbreviated terms **5**
4.1 Symbols and units 5
4.2 Subscripts 7
4.3 Abbreviated terms 7
5 Summary of method **7**
5.1 General 7
5.2 Outline of the principle — Bragg's law 7
5.3 Neutron sources 7
5.4 Strain determination 8
5.4.1 General 8
5.4.2 Monochromatic instrument 8
5.4.3 TOF instrument 8
5.5 Neutron diffractometers 9
5.6 Stress determination 9
6 Purpose, geometry and material **14**
6.1 General 14
6.2 Purpose of the measurement 14
6.3 Geometry 14
6.4 Composition 14
6.5 Thermal/mechanical history 15
6.6 Phases and crystal structures 15
6.7 Homogeneity 15
6.8 Microstructure 15
6.9 Texture 15
7 Preparations for measurements **15**
7.1 General 15
7.2 Alignment and calibration of the instrument 15
7.3 Choice of diffraction conditions 16
7.3.1 Monochromatic instruments 16
7.3.2 TOF instruments 18
7.4 Positioning procedures 19
7.5 Gauge volumes 19
7.6 Methods for establishing the macroscopically stress-free or reference lattice spacing 20
8 Measurement and recording requirements **22**
8.1 General 22
8.2 Recording requirements 22
8.2.1 General 22
8.2.2 General information — instrument 22
8.2.3 General information — specimen 23
8.2.4 Specific information required for each diffraction measurement 23
8.3 Specimen co-ordinates 24
8.4 Positioning of the specimen 24
8.5 Measurement directions 24
8.6 Number and location of measuring positions 24
8.7 Gauge volume 25
8.8 Gauge volume centroid considerations 25

© ISO 2019 – All rights reserved

8.9 Temperature 25
9 Calculation of stress 25
9.1 General 25
9.2 Normal stress determinations 25
9.3 Stress state determinations 26
9.3.1 General 26
9.3.2 The $\sin^2\boldsymbol{\psi}$ method 26
9.4 Choice of elastic constants 27
9.5 Diffraction data analysis 27
9.5.1 General 27
9.5.2 Peak fitting function 27
9.5.3 Background function 28
9.5.4 Peak to background ratio 28
9.5.5 Distorted peak profiles 28
10 Reliability 29
11 Reporting 30
11.1 General 30
11.2 Strain or stress values 30
11.2.1 General 30
11.2.2 Stress-free or reference lattice spacing 30
11.2.3 Conversion of strain to stress 30
11.2.4 Elastic constants 30
11.2.5 Positioning 30
11.3 Neutron source and instrument 30
11.4 General measurement procedures 31
11.5 Specimens/materials properties 31
11.6 Original data 31
11.7 Uncertainties and errors 31
Annex A (informative) **Measurement and analysis methodologies 32**
Annex B (informative) **Determination of uncertainties in a measurand 41**
Bibliography 44

 © ISO 2019 – All rights reserved

Foreword

ISO (the International Organization for Standardization) is a worldwide federation of national standards bodies (ISO member bodies). The work of preparing International Standards is normally carried out through ISO technical committees. Each member body interested in a subject for which a technical committee has been established has the right to be represented on that committee. International organizations, governmental and non-governmental, in liaison with ISO, also take part in the work. ISO collaborates closely with the International Electrotechnical Commission (IEC) on all matters of electrotechnical standardization.

The procedures used to develop this document and those intended for its further maintenance are described in the ISO/IEC Directives, Part 1. In particular, the different approval criteria needed for the different types of ISO documents should be noted. This document was drafted in accordance with the editorial rules of the ISO/IEC Directives, Part 2 (see www.iso.org/directives).

Attention is drawn to the possibility that some of the elements of this document may be the subject of patent rights. ISO shall not be held responsible for identifying any or all such patent rights. Details of any patent rights identified during the development of the document will be in the Introduction and/or on the ISO list of patent declarations received (see www.iso.org/patents).

Any trade name used in this document is information given for the convenience of users and does not constitute an endorsement.

For an explanation of the voluntary nature of standards, the meaning of ISO specific terms and expressions related to conformity assessment, as well as information about ISO's adherence to the World Trade Organization (WTO) principles in the Technical Barriers to Trade (TBT) see www.iso.org/iso/foreword.html.

This document was prepared by Technical Committee ISO/TC 135, *Non-destructive testing*, Subcommittee SC 5, *Radiographic Testing*.

This first edition cancels and replaces ISO/TS 21432:2005, which has been technically revised. It also incorporates the Technical Corrigendum ISO/TS 21432:2005/Cor 1:2008. Furthermore this document replaces ISO/TTA3:2001.

The main changes compared to ISO/TS 21432 are as follows:

— Figures 1 and 5 were replaced with updated, more suitable versions. The keys for several figures were updated in order to better reflect and explain the content of the figures.

— 5.4 was rearranged to emphasize the distinction between monochromatic instruments and time-of-flight instruments.

— The former Clause 7 became Clause 6 and vice versa. The new order reflects better the real order of steps taken in the preparation of a measurement.

— 7.6 was updated to provide additional details on the determination of the stress-free reference value.

— Clause 10 was slightly modified and the references to the ISO/IEC Guides relevant to uncertainty determination were updated.

— 11.7 was added in order to include uncertainties and errors in the reporting.

— A.5.4 was revised and amended to provide more information on grain size effects and the possibilities to mitigate these.

— A.9 was added to explain the calculation of stresses in the case of macroscopically anisotropic material.

— The Bibliography was updated by including a few new references.

© ISO 2019 – All rights reserved

— Throughout the document minor revisions of the text were implemented in order to correct small errors and to improve the clarity.

Any feedback or questions on this document should be directed to the user's national standards body. A complete listing of these bodies can be found at www.iso.org/members.html.

© ISO 2019 – All rights reserved

Introduction

Neutron diffraction is a non-destructive method that can be employed for determining residual stresses in crystalline materials. It can also be used to determine internal stresses in samples subjected to applied stresses. The procedure can be employed for determining stresses within the interior of materials and adjacent to surfaces. It requires specimens or engineering components to be transported to a neutron source. Elastic strains are derived from the measurements, which in turn are converted into stresses. The purpose of this document is to provide an International Standard for reliably determining stresses that are relevant to engineering applications.

© ISO 2019 – All rights reserved

Non-destructive testing — Standard test method for determining residual stresses by neutron diffraction

WARNING — This document does not purport to address the safety concerns, if any, associated with its use. It is the responsibility of the user of this document to establish appropriate safety and health practices and determine the applicability of regulatory limitations prior to use.

1 Scope

This document describes the test method for determining residual stresses in polycrystalline materials by neutron diffraction. It is applicable to both homogeneous and inhomogeneous materials including those containing distinct phases.

The principles of the neutron diffraction technique are outlined. Suggestions are provided on:

— the selection of appropriate diffracting lattice planes on which measurements should be made for different categories of materials,

— the specimen directions in which the measurements should be performed, and

— the volume of material examined in relation to the material grain size and the envisaged stress state.

Procedures are described for accurately positioning and aligning test pieces in a neutron beam and for precisely defining the volume of material sampled for the individual measurements.

The precautions needed for calibrating neutron diffraction instruments are described. Techniques for obtaining a stress-free reference are presented.

The methods of making individual measurements by neutron diffraction are described in detail. Procedures for analysing the results and for determining their statistical relevance are presented. Advice is provided on how to determine reliable estimates of residual stresses from the strain data and on how to estimate the uncertainty in the results.

2 Normative references

The following documents are referred to in the text in such a way that some or all of their content constitutes requirements of this document. For dated references, only the edition cited applies. For undated references, the latest edition of the referenced document (including any amendments) applies.

EN 13925-3:2015, *Non-destructive testing — X-ray diffraction from polycrystalline and amorphous materials — Part 3: Instruments*

koniec náhľadu – text ďalej pokračuje v platenej verzii STN

© ISO 2019 – All rights reserved

4.2 Subscripts

hkl, *hkil*	Indicate relevance to crystallographic (*hkl*) or (*hkil*) lattice planes
x, y, z	Indicate components of the quantity concerned along the x-, y-, z-axes
$\phi\ \psi$	Indicate the normal component, in the ($\phi\ \psi$) – direction of the quantity concerned
0 (zero)	Indicates stress-free value of the quantity concerned
ref	Indicates reference value of the quantity concerned

4.3 Abbreviated terms

PSD	Position sensitive detector
TOF	Time-of-flight
IGV	Instrumental gauge volume
NGV	Nominal gauge volume
SGV	Sampled gauge volume

5 Summary of method

5.1 General

This document is concerned with the determination of residual stresses that are needed in engineering analyses. The stresses are determined from neutron diffraction measurements of lattice spacings. From changes in these spacings, elastic strains can be derived, from which stresses can be calculated. By step-wise translation of a specimen or component across the reference point, stresses at different locations inside the specimen can be determined. In this clause the measurement process is summarized.

5.2 Outline of the principle — Bragg's law

When the lattice of a crystalline material is illuminated with penetrating neutron radiation with wavelength(s) similar to the interplanar spacings, this radiation will be diffracted as distinct Bragg peaks. The angle at which such a peak occurs is given by Bragg's law of diffraction, see Formula (1).

$$2d_{hkl}.\sin\theta_{hkl} = \lambda \tag{1}$$

where

λ	is the wavelength of the neutrons;
d_{hkl}	is the spacing of the (*hkl*) lattice planes responsible for the Bragg peak;
θ_{hkl}	is the Bragg angle.

The peak will be observed at an angle $2\theta_{hkl}$ from the incident beam direction, as shown schematically in Figure 1.

5.3 Neutron sources

Neutron diffraction uses beams of neutrons generated by either fission or spallation; the former is predominantly employed in steady-state nuclear reactors and the latter in pulsed spallation sources.

© ISO 2019 – All rights reserved

In both cases the neutrons produced are moderated to bring their energies to the thermal range, i.e. $\lambda \geq 0{,}09$ nm. At reactor sources, a monochromatic neutron beam is usually extracted by using a crystal monochromator to select a given narrow neutron wavelength band from the originally polychromatic beam. At spallation sources, the neutron beam usually consists of a series of short pulses each containing a wavelength spectrum. The velocity (and therefore wavelength in accordance with the de Broglie principle) of each neutron can be determined by measuring the distance it has travelled to the detector and the time it has taken to travel this distance, called the TOF. TOF measurements are, therefore, wavelength dispersive, with the entire diffraction pattern being recorded at all available detector positions.

5.4 Strain determination

5.4.1 General

It is evident from Bragg's Law that if λ and θ are known experimentally, the lattice spacing, d, can be determined. We define the lattice strain as the relative change in d with respect to the stress-free lattice spacing, d_0. Thus, for the lattice planes identified by Miller Indices *hkl*, the lattice strain is given by Formula (2):

$$\varepsilon_{hkl} \equiv \frac{d_{hkl} - d_{0,hkl}}{d_{0,hkl}} = \frac{\Delta d_{hkl}}{d_{0,hkl}} \tag{2}$$

By virtue of the diffraction process, the measurement direction is along the scattering vector, $\vec{Q} = \vec{k}_{\mathrm{f}} - \vec{k}_{\mathrm{i}}$, which bisects the angle between incident and diffracted beams and is perpendicular to the diffracting planes as shown in Figure 1.

5.4.2 Monochromatic instrument

When a specimen is illuminated by a monochromatic neutron beam of a fixed wavelength, its lattice spacing can be determined from the observed Bragg angle, θ, by substituting Bragg's Law [see Formula (1)] into the strain equation [see Formula (2)]. Thus, elastic lattice strains can be determined directly from the corresponding Bragg angles, θ_{hkl}, and $\theta_{0,hkl}$, and given by Formula (3):

$$\varepsilon_{hkl} = \frac{\sin\theta_{0,hkl}}{\sin\theta_{hkl}} - 1 \tag{3}$$

5.4.3 TOF instrument

At a TOF instrument the incident beam contains neutrons spanning a range of velocities (i.e. wavelengths) arriving at the sample in pulses. In this case all lattice planes normal to the scattering vector will diffract neutrons to the detector. The diffraction corresponding to each *hkl* peak is produced by different families of grains. By using the de Broglie relationship and Bragg's Law [see Formula (1)] the TOF t_{hkl} for a particular wavelength, crystal plane and a detector positioned at angle 2θ, takes on the form as given in Formula (4):

$$t_{hkl} = 2\frac{m_{\mathrm{n}}}{h} \times L \times \sin\theta \times d_{hkl} \tag{4}$$

Solving for d_{hkl} and $d_{0,hkl}$ and substituting into the strain equation [Formula (2)] for a fixed angle 2θ, the elastic strain can be calculated from flight time change using Formula (5):

$$\varepsilon_{hkl} \equiv \frac{t_{hkl} - t_{0,hkl}}{t_{0,hkl}} = \frac{\lambda_{hkl} - \lambda_{0,hkl}}{\lambda_{0,hkl}} \tag{5}$$

or by averaging over all planes using a full pattern analysis such as the Rietveld refinement procedure[2] (see 7.3.2 and A.7.3).

 © ISO 2019 – All rights reserved

5.5 Neutron diffractometers

A monochromatic instrument typically used for strain determination at a steady state source is shown schematically in Figure 2. The polychromatic neutron beam is first monochromated to a chosen wavelength by diffraction from a suitable monochromator. This monochromatic beam is spatially defined by appropriate beam-defining apertures to produce a beam of controlled dimensions. The neutrons in this beam are diffracted from the specimen volume illuminated and captured by a neutron detector. An example of a diffraction peak from a monochromatic instrument is shown in Figure 3.

At TOF diffractometers, typically used at pulsed sources, each pulse produces a diffraction profile across a range of lattice spacings. A typical TOF diffractometer used for strain determination in two directions simultaneously at a pulsed source is shown in Figure 4. As a fixed scattering angle is used, most instruments at spallation sources use radial collimation. This allows neutrons to be detected over a wider solid angle than would be possible using a slit, yet ensuring that most of the detected neutrons come from a defined gauge volume (see 7.5). The signals from the individual elements of the detector array are combined taking into account their different angular positions. Two or more detectors with radial collimators can be used to enable the simultaneous measurement of more than one $\vec{Q}$ (strain) direction. A typical diffraction pattern from such an instrument is shown in Figure 5, which also shows the result of a Rietveld profile refinement where a crystallographic model of the structure is fitted to the diffraction data using a least squares analysis (see 7.3.2).

Additional information concerning the fitting of the diffraction data is provided in 9.5.

5.6 Stress determination

Stress and strain are second rank tensors that are related through a solid's elastic constants. Since by means of neutron diffraction elastic strains within a defined volume in a crystalline solid can be determined, it is possible to calculate the mean stress in that volume provided that the relevant material elastic constants are known. Deriving the full strain tensor requires the determination of elastic strains in at least six independent directions. If the principal strain directions within the body are known, measurements along these three orthogonal directions are sufficient to determine the principal stresses. For plane stress or plane strain conditions, a further reduction to two directions is possible. Measurement along one direction is sufficient in the case of uni-axial loading. Clause 9 and A.9 provide further details on the calculation of stresses from derived strains.

Stresses and strains in a specimen are usually direction and position dependent. This leads to the need to obtain strains at a number of locations in more than one direction. This in turn requires the accurate positioning of the specimen with respect to the collimated neutron beam and the detectors. This is usually accomplished by mounting the specimen on linear translation and rotation tables.

By a step-wise movement of the specimen in relation to the volume in the space identified by the intersection of the incident and diffracted beams (termed a gauge volume, see 7.5), the spatial variation in elastic strain and, following measurements in other directions, stress can be mapped within a specimen or component.

© ISO 2019 – All rights reserved

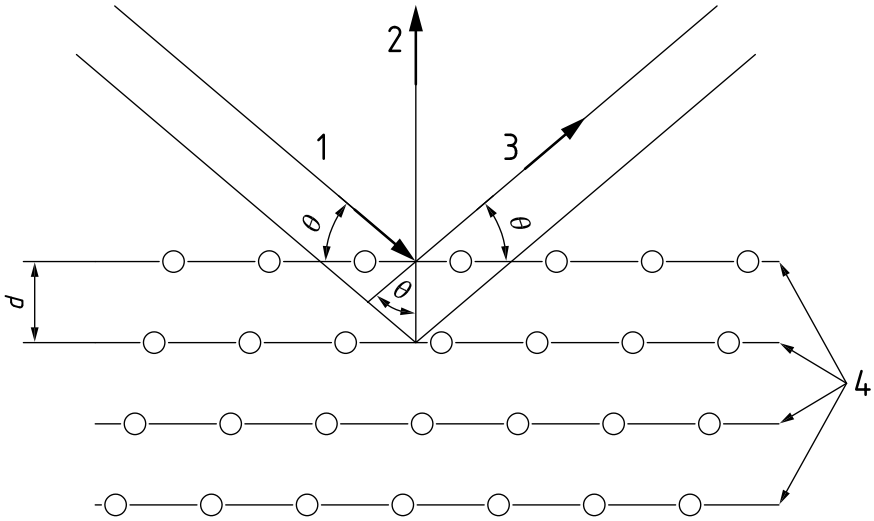

Key

1 incident wave vector $\vec{k}_{\mathrm{i}}$

2 scattering vector $\vec{Q}$

3 diffracted wave vector $\vec{k}_{\mathrm{f}}$

4 diffracting planes of spacing d

θ one-half of the diffraction angle

Figure 1 — The Bragg diffraction geometry

 © ISO 2019 – All rights reserved

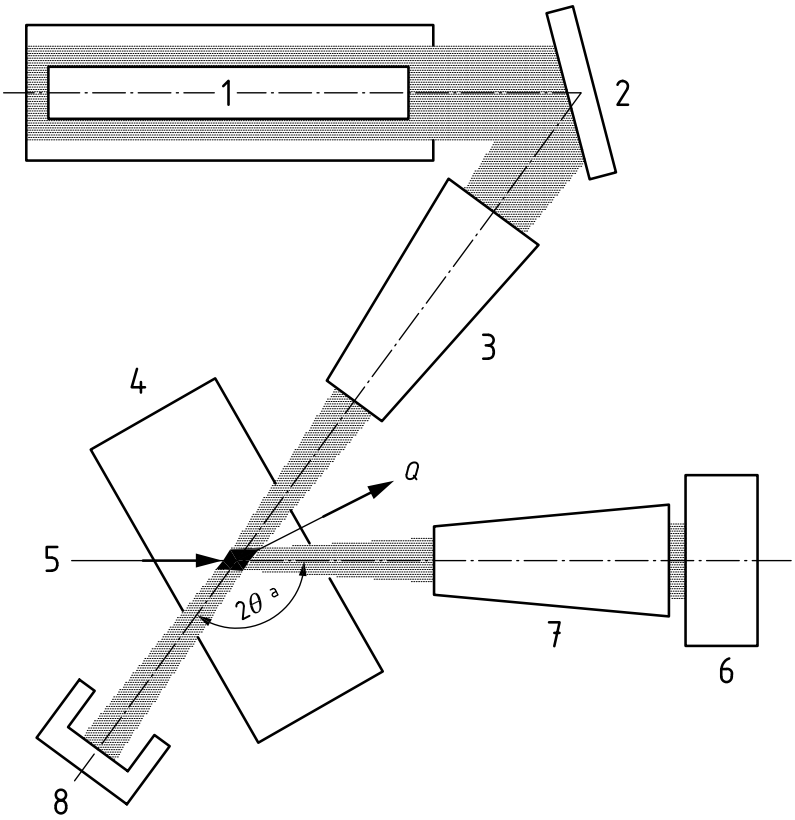

Key

1 neutron beam from the source
2 monochromator
3 beam-defining optics for the incident beam and shielding
4 specimen
5 gauge volume
6 detector
7 beam-defining optics for the diffracted beam and shielding
8 beam stop
Q scattering vector
2θ [a] scattering angle

Figure 2 — Schematic illustration of a steady state source based diffractometer for elastic strain determination

© ISO 2019 – All rights reserved

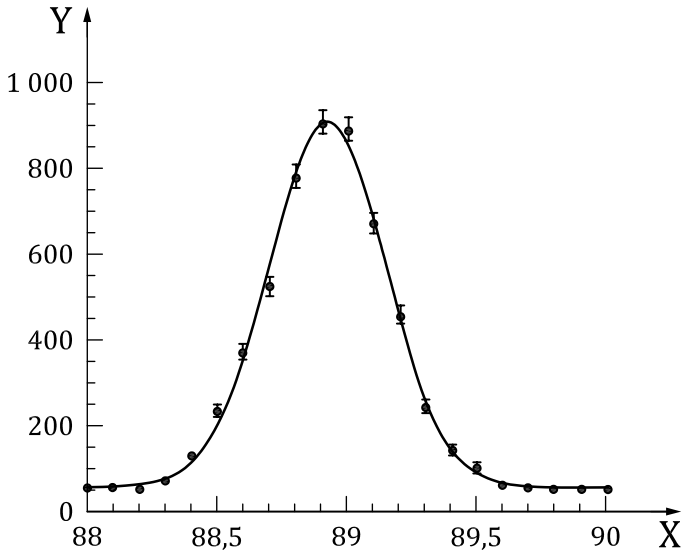

Key

X 2θ, degrees

Y neutron counts

Figure 3 — Example of a Bragg peak from a reactor (steady state source) based diffractometer fitted with a Gaussian distribution

 © ISO 2019 – All rights reserved

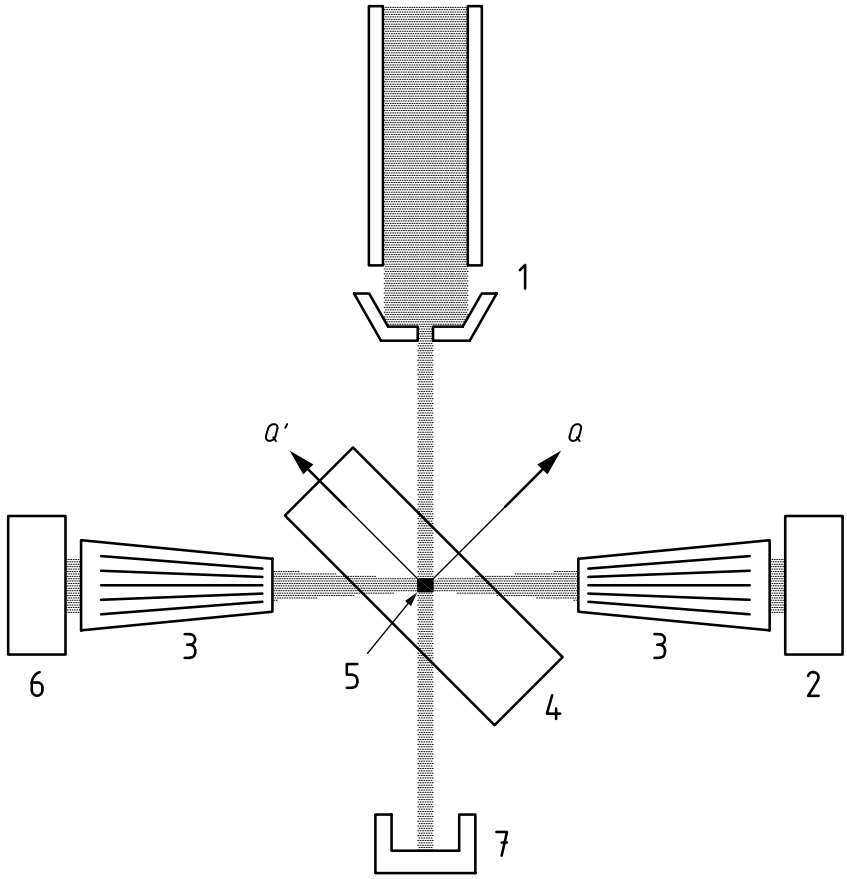

Key

Q scattering vector, right detector
Q′ scattering vector, left detector
1 neutron beam from the source
2 right detector
3 radial collimator
4 specimen
5 gauge volume
6 left detector
7 beam-stop

Figure 4 — Schematic illustration of a pulsed-source TOF diffractometer for elastic strain determination

© ISO 2019 – All rights reserved

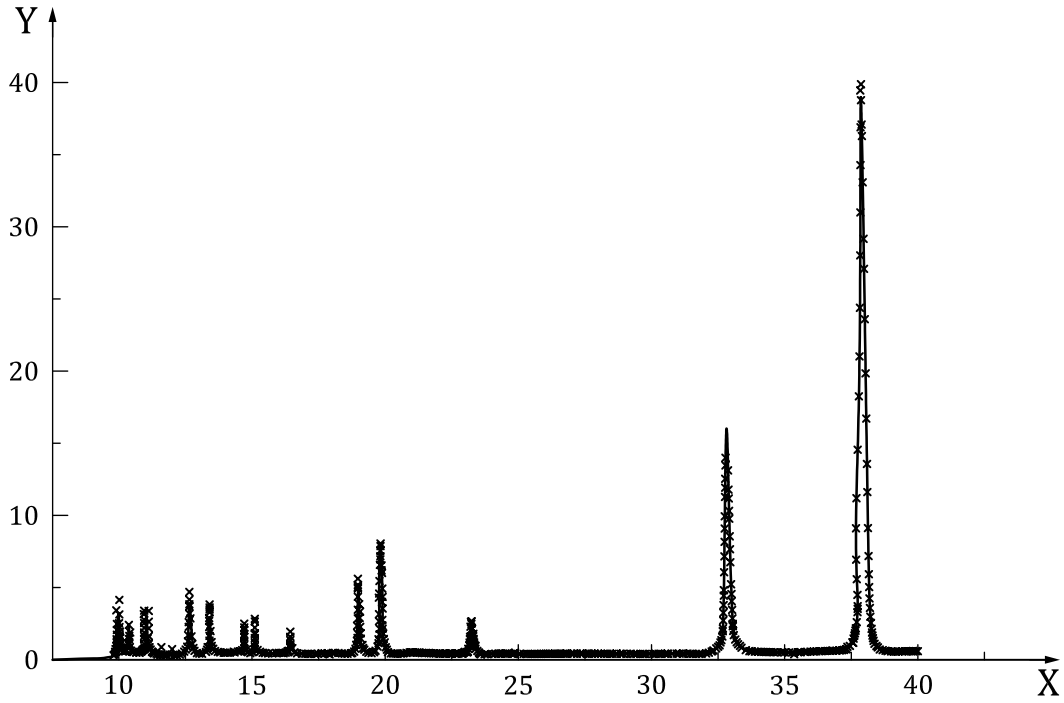

Key

X time-of-flight, ms

Y intensity

× data

— Rietveld profile fit

Figure 5 — Example of a diffraction pattern from a pulsed source

6 Purpose, geometry and material

6.1 General

The design of an experiment depends upon the purpose of the measurement, the dimensions and shape of the specimen, the materials from which it is made and how it has been fabricated and used.

6.2 Purpose of the measurement

The purpose and scope of the measurements shall be defined as this determines many decisions that have to be made.

6.3 Geometry

The as-made dimensions and shape of the specimen shall be known and considered in the preparation of the measurement.

6.4 Composition

Standard material designations that indicate the chemical composition and processing route shall be used to enable appropriate experimental conditions to be chosen. Furthermore, for multiphase materials, including composites, the chemical composition, fraction, orientation and morphology of each phase shall also be considered for their influence on the stress determination.

 © ISO 2019 – All rights reserved

6.5 Thermal/mechanical history

The processing route used to shape, form or join the specimen, including heat treatment, shall be considered in designing the experiment. In the case of parts removed from service use, the previous operating conditions may also be relevant.

6.6 Phases and crystal structures

The phases in the material to investigate shall be known. The crystallographic structure of phases used in the measurements shall be known.

6.7 Homogeneity

Information about any spatial variation in the composition, microstructure or phase distribution is relevant to the experiment. This may affect the confidence in the measurements obtained at a particular location in a specimen or component and whether it is valid in taking the results to be representative of the specimen or component as a whole. In particular, inhomogeneities in the microstructure and composition can lead to variations in the stress-free lattice spacing with position in the specimen or component (see 7.6).

6.8 Microstructure

Large dimensions of grains or composite reinforcements can result in point-to-point fluctuations in diffraction peak intensities, which may indicate that an insufficient number of grains are being sampled. Consequently the grain size in relation to the gauge volume employed and to the stress distributions shall be established in such cases.

6.9 Texture

The presence of crystallographic texture affects the diffraction peak intensity and the conversion of strain to stress. If the material is known to possess a texture, as a result of processing or use, it should be characterised and possible implications reported.

7 Preparations for measurements

7.1 General

Prior to an actual measurement it is necessary to carry out or verify the instrument alignment. Then appropriate conditions for the diffraction measurement shall be chosen and the specimen shall be accurately positioned on the diffraction instrument. Also the dimensions of the volume from which the diffraction data will be collected shall be chosen.

7.2 Alignment and calibration of the instrument

It is necessary to align and good practice to calibrate the diffractometer being used (see A.5.2). When using a monochromatic beam instrument, it shall be ensured that a constant wavelength is maintained throughout the entire set of measurements and that the detector angular response has been calibrated in accordance with EN 13925-3:2015, Annex C. At a TOF-diffractometer, both the flight path and detector angular response should be calibrated. For both types of instrument, calibration is performed using a standard specimen typically silicon, ceria or alumina powders. Such specimens are chosen because they diffract neutrons strongly, have known and well-defined lattice parameters and have small intrinsic peak widths. If intensity information is required at a TOF instrument it is necessary to determine the incident neutron flux and the detector efficiency as a function of the wavelength. One way of doing this is to use an incoherent scatterer, such as vanadium.

© ISO 2019 – All rights reserved

7.3 Choice of diffraction conditions

7.3.1 Monochromatic instruments

7.3.1.1 Choice of the wavelength

At monochromatic instruments the user shall choose the neutron wavelength for a particular experiment from the range of wavelengths available. The wavelength and diffraction plane should be selected such that an efficient execution of the experiment is achieved for a diffraction angle near 90°. However, if the chosen wavelength is close to twice the *d*–spacing of any diffraction plane in the specimen, "Bragg edge" related spectrum distortion can occur that can cause peak shifts, which can be falsely interpreted as strains. These "problematic" wavelengths have been tabulated in Reference [3] for several common metals. For cubic materials, in particular, diffraction angles too close to 90° should be avoided since for all (*hkl*) diffraction planes there is an alternate (*h′k′l′*) which can cause a Bragg edge related effect.

The efficiency with which a measurement can be performed depends on parameters such as spatial resolution, incident beam intensity at the chosen wavelength, diffracted neutron intensity, peak width and separation of the peak under investigation from adjacent peaks. With respect to these factors a diffraction angle quite different from 90° can be more efficient than one close to 90°.

7.3.1.2 Choice of the diffracting lattice plane

In the presence of elastic and plastic anisotropy in a material, different (*hkl*) planes may exhibit different responses to a macroscopic stress field[4]. This can be demonstrated by loading and unloading a tensile bar, in situ, in a neutron diffractometer whilst measurements of the stress and strain are recorded, as indicated in Figures 6 and 7. In these figures, the stress recorded by a load cell in series with a test bar is plotted against the elastic strain derived from neutron diffraction measurements.

Figure 6 shows that a linear response is obtained in the elastic region irrespective of the set of lattice planes used to make the measurements. This demonstrates that any (*hkl*) reflection can be employed for determining the stress in this region, provided that the appropriate diffraction elastic constants are chosen. Generally, these are neither the macroscopic elastic constants nor the single crystal values, but a polycrystalline aggregate value associated with a particular (*hkl*) plane. These constants can be obtained either experimentally as Figure 6 demonstrates, or calculated (see Clause 9). The calculation methods include the Reuss[5], Voigt[6], Neerfeld-Hill[7][8] and self-consistent methods, e.g. Kröner[9]. Normally the Neerfeld-Hill method provides reliable approximations and is much simpler to implement than the self-consistent approaches. Regardless of the method used, the crystallographic texture of the specimen shall be taken into account. See references [10] and [11] for discussions on the importance of texture.

Plastic deformation begins at different stresses recorded by the load cell in differently oriented grains, as illustrated in Figure 7. This is demonstrated by a non-linear response on loading followed by linear elastic unloading. The consequence is that a different residual elastic strain may be observed for each (*hkl*) plane upon unloading to zero applied stress. These strains are usually called intergranular strains. After complete unloading of the test bar, the engineering (macroscopic) residual stress shall be zero to satisfy equilibrium conditions. The stress will be calculated from the observed residual strains at zero applied load. However, this can be a superposition of Type I and Type II stress. Therefore, if Type I stresses are to be determined, it is important to use crystallographic planes that do not bear significant Type II (intergranular) strain [e.g. plane (220) or (311) in Figure 7].

In some cases it is necessary and appropriate to employ (*hkl*) planes that are sensitive to intergranular strains. In such cases compensations shall be made for the intergranular strains. One suitable approach is to obtain the d_0 value from coupons that are taken from the specimen under investigation and are sufficiently small not to contain macrostresses[12][13]. Examples of (*hkl*) planes with high and low sensitivity to intergranular strains for a range of materials are listed in Table 1. These data are based on intergranular strains developed in plastically deformed uniaxial loading specimens. In general, the deformation history of a particular material or component may be more complicated.

 © ISO 2019 – All rights reserved

Table 1 — Examples of planes exhibiting high and low sensitivity to intergranular strains for materials of different symmetry

Material	Planes with low sensitivity to intergranular strains	Planes with high sensitivity to intergranular strains
fcc (Ni[14], Fe[15], Cu[16]), fcc (Al[17][18]), Ni[4]	(111), (311), (422)	(200)
bcc (Fe[18])	(110), (211)	(200)
hcp (zircaloy[19], Ti[20])	$(10\bar{1}2)$, $(10\bar{1}3)$ (Pyramidal)	(0002) (basal) $(10\bar{1}0)$, $(1\bar{2}10)$ (prism)
hcp (Be[21])	$(20\bar{2}1)$, $(11\bar{2}2)$ (2nd order pyramidal)	$(10\bar{1}2)$, $(10\bar{1}3)$ (basal, prism and 1st order pyramidal)

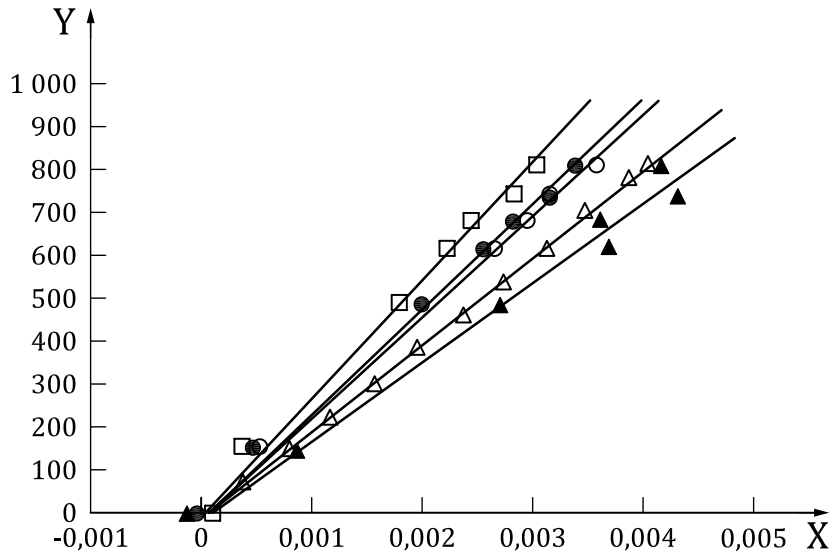

Key

□ (111) planes
▲ (200) planes
○ (311) planes
● profile refinement
△ load cell indication
X recorded lattice strain
Y applied stress (MPa)

Figure 6 — Elastic response of different crystallographic planes for nickel alloy[4]

© ISO 2019 – All rights reserved

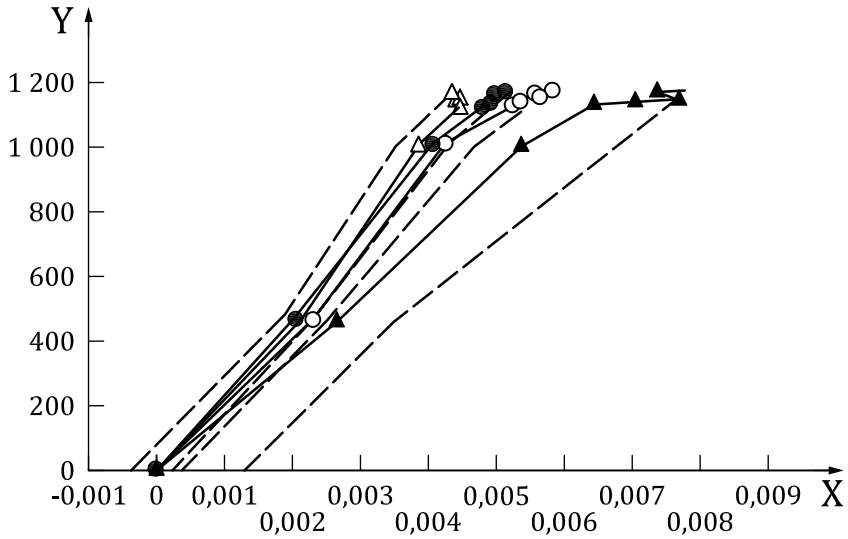

Key

—▲—	(200) planes
—○—	(311) planes
—△—	(220) planes
—●—	profile refinement
— — —	unload
X	recorded lattice strain
Y	applied stress (MPa)

Figure 7 — Effect of yielding on the response of different crystallographic planes to the loading and unloading of a tensile bar of a nickel alloy [4]

7.3.2 TOF instruments

When a full pattern analysis such as the Rietveld refinement procedure[2] is used, the strain is obtained from changes in the lattice parameters defining the unit cell dimensions.

For cubic materials with lattice parameter a_0, the strain is given by Formula (6):

$$\varepsilon = \frac{a - a_0}{a_0} \tag{6}$$

where

ε is the strain;

a is the lattice parameter value under strain obtained from the full pattern analysis [it replaces the lattice spacing d in Formula (2)];

a_0 is the stress-free lattice parameter.

For non-cubic materials it is necessary to identify a suitable strain parameter, e.g. in hexagonal materials free of texture, an appropriate expression for the strain is given in Formula (7):

$$\varepsilon = \frac{2\varepsilon_a + \varepsilon_c}{3} \tag{7}$$

where

 © ISO 2019 – All rights reserved

ε is the strain;

ε_a is the strain determined from the a lattice parameter in the same way as in Formula (6)[21];

ε_c is the strain determined from the c lattice parameter in the same way as in Formula (6)[21].

7.4 Positioning procedures

The initial alignment procedure requires the determination of the location of the centroid of the IGV, see 7.5 and Figure 9. This location is defined as the reference point to which all measurements are referred. It should ideally coincide with the centre of rotation of the specimen table.

An accurate specimen positioning is required, as described in A.3. The level of accuracy required depends to some extent on the objectives of the measurements to be made. Positioning accuracy is most important in the case of large strain gradients and where measurements are made close to surfaces or interfaces. It is important that the uncertainty in positioning is declared.

Alignment can be carried out for example by optical or mechanical means, or by using surface scans (see A.3.4). All three methods can determine the position of a specimen edge relative to the reference point to an uncertainty of 0,1 mm.

Experiment planning and control software that model the sample and the instrument exist[22]. When such systems are used in concert with data acquisition, the resulting uncertainty in positioning — which is a function of the instrument, the model and the computation — shall be established and reported.

7.5 Gauge volumes

The NGV is defined as that volume of space that is occupied by the intersection of parallel beams of neutrons, which are transmitted through the defining apertures (e.g. slits, collimators) for both the incident and diffracted neutrons (Figure 8). The centroid of the NGV is the geometric centre of this volume.

For a system which incorporates radial collimators the concept is identical, except that each radial collimator slit contributes to the NGV.

The IGV is the volume of space defined by the actual neutron beam paths through the defining apertures, taking into account the beam divergence and the beam intensity profile (Figure 9). Methods of determining the IGV by probing it with a scattering element are presented in A.5.1. The IGV dimensions can also be defined in terms of the FWHM of the beam intensity profile. Whatever practice is adopted shall be specified.

The difference between the IGV and the NGV may be particularly evident when small volumes are being sampled due to a relatively more significant contribution from the penumbra. Note that the IGV and NGV are properties of the diffractometer itself.

Finally, the SGV is the intersection of the IGV with the specimen phase under investigation (see Figure 10). That is, a spatially dependent sub-volume weighted by the scattering of the phase investigated. Consequently it is the volume over which the average strain is obtained.

Additionally, the centroid of the SGV (i.e. the intensity-weighted centre of the scattering) can be at a different position from that of the IGV as shown in Figure 10 due to several factors:

— partial filling of the IGV with the specimen phase under investigation;

— attenuation of the neutron beam within the specimen;

— wavelength and intensity distribution in the neutron beam.

The SGV and its centroid should be determined for each measurement. It is important that the derived strain be reported at this position.

© ISO 2019 – All rights reserved

The effect of the weighting can become significant in cases such as at surfaces and interfaces, in highly attenuating materials, large grained materials, and at texture or microstructure gradients. The asymmetric presence of a strong incoherent scatterer can also affect results.

The consequences of the SGV centroid being offset from the reference point are discussed in A.5.5 and A.6. Additional information can be found in Reference [23].

7.6 Methods for establishing the macroscopically stress-free or reference lattice spacing

Since diffraction measurements allow the determination of lattice spacings (see 5.4 and 7.3.2), in order to determine elastic strains it is necessary to obtain a reference value, relative to which the strains can be determined. In some cases it is possible to determine a stress-free lattice spacing d_0. In other cases only a reference lattice spacing d_{ref} (the lattice spacing to which other measurements will be compared) is possible. It should be noted that actual values of stress can only be determined when strains are calculated relative to d_0. The use of d_{ref} should only be made when values of d_0 are not available.

Lattice plane spacings may be influenced by a number of causes apart from the stress. The most important of these are chemical composition and temperature. The optimum method of determining d_0 (or d_{ref}) depends on the particular problem under consideration.

In some cases it may be sufficient to use a single stress-free or reference value. In other cases it may be necessary to use spatially and/or directionally dependent values[24].

When a single value can be used it may be determined by:

— measurement in a material at a position known to contain a negligible stress;

— measurement on a powder, which is representative of the material being examined. This is particularly suitable for multiphase materials.

In the case of spatial and directional variations in d_0, these values can be obtained by:

— measurement on small coupons, cut from large blocks of material. This is particularly relevant to welds, since the use of multiple coupons allows the determination of spatial and directional variations in d_0 through a weldment[12][13][19].

Other approaches include:

— determination of d_0 by imposing force and moment equilibrium (noting that experimental methods should be used wherever possible, and that equilibrium should be employed mainly for validation purposes), and

— determination of d_0 by ensuring zero stress perpendicular to a free surface. This is only suitable when there is no variation in d_0 away from the surface and when an accurate determination of near surface strains is possible.

It is good practice to confirm that measured stress results satisfy force and moment equilibrium across a section of a component. This requires that sufficient measurements across an appropriate section have been made.

During the preparation of a “stress-free” sample of material, care shall be taken to avoid the introduction of residual stresses or modification of the microstructure or of the chemical composition.

It is necessary to centre the reference sample accurately at the IGV centroid.

 © ISO 2019 – All rights reserved

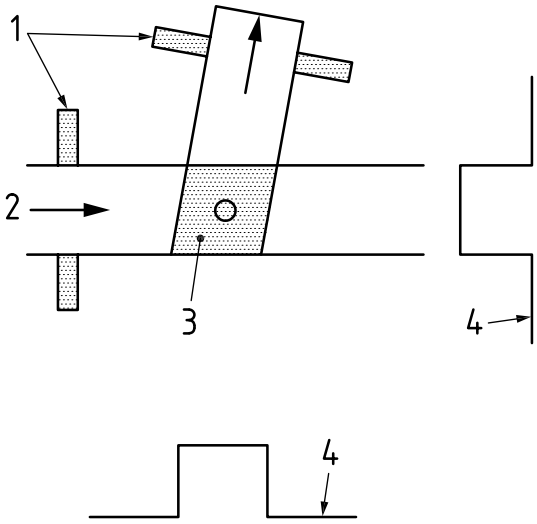

Key

1 apertures
2 incident neutrons
3 NGV
4 neutron intensity profile
○ centroid of the NGV

Figure 8 — Plan view of the nominal gauge volume.

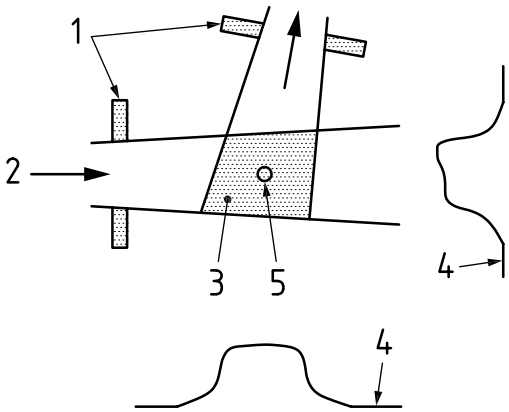

Key

1 apertures
2 incident neutrons
3 IGV
4 neutron intensity profile
5 reference point (centroid of the IGV)

Figure 9 — Plan view of the instrumental gauge volume

© ISO 2019 – All rights reserved

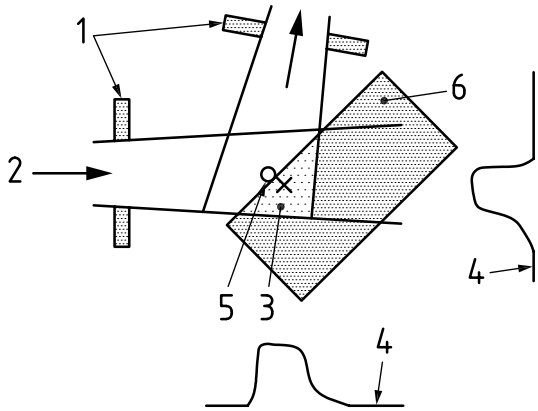

Key

1 apertures
2 incident neutrons
3 SGV
4 neutron intensity profile
5 reference point (centroid of the IGV)
6 specimen
× centroid of the SGV

Figure 10 — Plan view of the sampled gauge volume.

8 Measurement and recording requirements

8.1 General

Three parameters shall be determined with appropriate accuracy:

a) the strain,

b) the direction of the strain component, and

c) the position in the specimen at which the measurement is made.

Sufficient information shall be recorded such that the experimental approach and data analysis can be understood, evaluated and reproduced. Measurement and analysis methodologies as well as experimental considerations are presented in Annex A. Discussion of the determination of uncertainties in a measurand is provided in Annex B.

8.2 Recording requirements

8.2.1 General

In general, the project title, persons involved in the investigation and the dates of the measurements shall be provided together with the following information.

8.2.2 General information — instrument

Instrument related information:

a) individuals responsible for the instrument;

b) neutron source and location, name and type of instrument;

 © ISO 2019 – All rights reserved

c) temperature ± variation;

d) optics components in incident and diffracted beams; for slits, height, width and distance to the reference point shall be specified; for radial collimators, focal length, foil length and thickness, angle between foils, all aperture dimensions and collimator oscillation parameters shall be quoted.

Parameters for monochromatic instruments:

a) the type of monochromator, its crystal and reflection used, the type of detector, the distance from the monochromator to the reference point, the distance from the detector to the reference point;

b) the wavelength and how it was determined;

c) the vertical and horizontal gauge intensity profile if critical to the measurement;

d) the resolution of the detector.

Parameters for TOF instruments:

a) the total flight path length L, the distance from the detector to the reference point, the type of detector, the angular range of the detector;

b) the wavelength range and how it was determined;

c) the vertical and horizontal gauge intensity profile if critical to the measurement;

d) the number of Bragg peaks used or d-spacing range used in the analysis of data;

e) the time resolution or channel width;

f) the incident intensity as a function of the wavelength.

8.2.3 General information — specimen

Specimen related information:

a) specimen material, chemical composition, crystal structure;

b) diagram of the specimen showing dimensions, fiducial marks or reference locations and specimen co-ordinates.

8.2.4 Specific information required for each diffraction measurement

All original data shall be recorded and available. The methods by which the data have been processed shall also be recorded and available.

Information related to specific measurements:

For monochromatic instruments:

a) the peak position $2\theta_{hkl}$ ± uncertainty;

b) the peak position for the lattice planes in the stress-free condition $2\theta_{0,hkl}$ (or reference peak position $2\theta_{\mathrm{ref},hkl}$) ± uncertainty.

For TOF instruments:

a) the times of flight t_{hkl} or lattice parameter(s) in the case of full pattern analysis ± uncertainty;

b) the times of flight for the lattice planes in the stress-free condition, $t_{0,hkl}$ (or reference times of flight $t_{\mathrm{ref},hkl}$) or reference lattice parameter(s) in the case of full pattern analysis ± uncertainty.

© ISO 2019 – All rights reserved

For any type of instrument:

a) the specimen orientation relative to the scattering vector $\vec{Q}$ ± uncertainty;

b) the specimen and the gauge volume positions relative to the reference point ± uncertainty;

c) the strain ± uncertainty;

d) the *d*-spacing measurement ± uncertainty (if absolute values are required).

For single peak analysis:

a) the angle or time increment;

b) the peak profile function used and the parameter values obtained, including:

   1) the FWHM ± uncertainty;

   2) the peak height H or integrated intensity I ± uncertainty;

   3) the background B ± uncertainty.

For multiple peak fits or full pattern analysis (e.g. Rietveld refinement):

a) the peak profile(s) used and relevant parameters including:

   1) the width, as a function of the wavelength or diffraction angle;

   2) the peak profile asymmetry;

b) the background fit used;

c) a description of how texture, elastic and plastic anisotropy are taken into account.

8.3 Specimen co-ordinates

The co-ordinate system used to define the location and direction within a specimen shall be clearly specified and shall relate to the shape of the specimen and/or to the principal stress directions, if known.

NOTE For most applications on regular-shaped specimens or components, rectangular or polar co-ordinates aligned with respect to symmetry features are appropriate.

8.4 Positioning of the specimen

The position of a specimen shall be defined relative to the instrument reference point (see 7.4) The orientation of the specimen co-ordinate system shall be defined in relation to the co-ordinate system used to define $\vec{Q}$. The reference point position shall be defined as accurately as is practicable. Details are given in A.3.

8.5 Measurement directions

Measurements along at least six independent directions are generally required in order to determine the strain/stress tensor. Nevertheless, three measurements along any three mutually orthogonal co-ordinate axes (e.g. the specimen co-ordinate system) yield the respective normal components of the stress tensor. Therefore important information can be obtained without knowing the principal stress directions and without making measurements in more than three independent orientations (see 5.6).

8.6 Number and location of measuring positions

The number and locations of measurements shall be related to the strain detail that is required, to the shape and dimensions of features of interest of the strain profile and to the size of the gauge volume used.

 © ISO 2019 – All rights reserved

For test locations that require a long neutron path length within the specimen, it may be necessary to remove some material to make the measurement possible.

Care shall be taken in such cases because material removal results in a redistribution of the stresses inside the specimen, which can affect the stress at the location of interest.

More details are given in A.4.

8.7 Gauge volume

Gauge volumes are defined by appropriate beam-defining optics in the incident and diffracted beams, and the directions and divergences of those beams. The choice of gauge volume dimensions shall relate to the shape and the dimensions of features of interest of the strain profile and to material parameters such as grain size and attenuation lengths. Details are given in A.5.

8.8 Gauge volume centroid considerations

The SGV centroid position shall be determined taking into account instrumental aberrations and attenuation. Special attention is required when scanning through surfaces or interfaces. Details are given in A.6.

8.9 Temperature

The specimen temperature shall be monitored and controlled such that changes in lattice dimensions either are small relative to the uncertainty specified for the obtained strain or can be accounted for. Details are given in A.8.

9 Calculation of stress

9.1 General

With neutron diffraction elastic strains can be determined and stresses calculated from these strains. Only normal strains can be derived from the measured data; shear strains can be calculated, if needed.

Essentially all diffraction investigations of stresses and strains are based on continuum mechanics using Hooke's law for stress calculations. As discussed in 7.3, the only major alteration is the use of specific diffraction elastic constants rather than the overall aggregate average. Hence, the average elastic constants in the generalized Hooke's law are simply exchanged with the appropriate diffraction elastic constants (E_{hkl}, ν_{hkl}). When these diffraction elastic constants are calculated from the single crystal elastic constants C_{ij} using suitable models or measured by means of in-situ uniaxial tests, care shall be taken. The procedure for calculating stresses in isotropic materials is described in 9.2 to 9.4.

9.2 Normal stress determinations

The normal stresses at a point can be determined from strain components along three mutually orthogonal co-ordinate axes, x, y and z, at that point. In this case the stresses are given in Formulae (8), (9) and (10):

$$\sigma_{xx} = \frac{E_{hkl}}{(1+\nu_{hkl})(1-2\nu_{hkl})}\left[(1-\nu_{hkl})\varepsilon_{xx} + \nu_{hkl}(\varepsilon_{yy}+\varepsilon_{zz})\right] \tag{8}$$

$$\sigma_{yy} = \frac{E_{hkl}}{(1+\nu_{hkl})(1-2\nu_{hkl})}\left[(1-\nu_{hkl})\varepsilon_{yy} + \nu_{hkl}(\varepsilon_{xx}+\varepsilon_{zz})\right] \tag{9}$$

© ISO 2019 – All rights reserved

$$\sigma_{zz} = \frac{E_{hkl}}{(1+\nu_{hkl})(1-2\nu_{hkl})}\left[(1-\nu_{hkl})\varepsilon_{zz} + \nu_{hkl}(\varepsilon_{xx}+\varepsilon_{yy})\right] \tag{10}$$

where the indices

xx, yy, and zz indicate the co-ordinate axes, along which the normal strains and stresses are obtained.

When the co-ordinate axes are coincident with the principal directions of deformation, these stresses are the principal stresses.

For plane stress conditions, where one of these stresses (say σ_{zz}) is zero these formulae reduce to Formulae (11) and (12):

$$\sigma_{xx} = \frac{E_{hkl}}{(1-\nu_{hkl}^2)}[\varepsilon_{xx} + \nu\varepsilon_{yy}] \tag{11}$$

$$\sigma_{yy} = \frac{E_{hkl}}{(1-\nu_{hkl}^2)}[\varepsilon_{yy} + \nu\varepsilon_{xx}] \tag{12}$$

For plane strain conditions with $\varepsilon_{zz} = 0$, the corresponding expressions for σ_{xx} and σ_{yy} are obtained by substituting $\varepsilon_{zz} = 0$ in Formulae (8), (9) and (10), and σ_{zz} becomes as given in Formula (13):

$$\sigma_{zz} = \nu_{hkl}(\sigma_{xx} + \sigma_{yy}) \tag{13}$$

For the case of strong macroscopic anisotropy see A.9.

9.3 Stress state determinations

9.3.1 General

When the principal directions of the stress state are not known, determination of strain in at least six independent orientations is in general needed to identify the complete strain state at a given location. The full stress tensor components can be derived from these normal strains $\varepsilon_{\varphi\psi}$ using Formula (14):

$$\varepsilon_{\Phi\Psi} = \left(\frac{1+\nu_{hkl}}{E_{hkl}}\right)\left[\begin{array}{l}(\sigma_{xx}\cos^2\Phi + \sigma_{yy}\sin^2\Phi + \sigma_{xy}\sin 2\Phi)\sin^2\Psi \\ +\sigma_{xz}\cos\Phi\sin 2\Psi + \sigma_{yz}\sin\Phi\sin 2\Psi + \sigma_{zz}\cos^2\Psi\end{array}\right] - \frac{\nu_{hkl}}{E_{hkl}}\left[\sigma_{xx} + \sigma_{yy} + \sigma_{zz}\right] \tag{14}$$

where

Φ and Ψ are the orientation angles (see Figure 11), and

$\varepsilon_{\Phi\Psi}$ is the normal strain in the direction defined by the orientation angles Φ and Ψ.

In Formula (14) subscripts *xy*, *xz* and *yz* correspond to the shear components of stress.

It is desirable to choose the six measurement directions so that they are oriented by the largest angular separations possible.

9.3.2 The $\sin^2\psi$ method

When one of the principal directions is known at the location of interest within the specimen, e.g. *z*, the $\sin^2\psi$ method may be applied. In such a case the shear stresses σ_{xz} and σ_{yz} are equal to zero, and Formula (14) may be simplified. In this instance, it is possible to calculate the difference between the

 © ISO 2019 – All rights reserved

normal stress in a given direction in the x-y plane, σ_{Φ}, and σ_{zz} from Formula (15), which is the simplified form of Formula (14):

$$\varepsilon_{\Phi\Psi} = \frac{1+\nu_{hkl}}{E_{hkl}}(\sigma_{\Phi} - \sigma_{zz})\sin^2\Psi - \frac{\nu_{hkl}}{E_{hkl}}(\sigma_{xx} + \sigma_{yy} + \sigma_{zz}) + \frac{1+\nu_{hkl}}{E_{hkl}}\sigma_{zz} \tag{15}$$

since

$$\sigma_{\Phi} = \sigma_{xx}\cos^2\Phi + \sigma_{yy}\sin^2\Phi + \sigma_{xy}\sin 2\Phi \tag{16}$$

Since in Formula (15), the desired value, $(\sigma_{\Phi}-\sigma_{zz})$, is a linear function of $\sin^2\psi$, this approach is frequently called "the $\sin^2\psi$ method" and is commonly used in stress determination in conventional X-ray diffraction[25]. The wider the range of ψ the more reliable the stress determination. This method is useful when it is not possible to measure in certain directions.

9.4 Choice of elastic constants

The diffraction elastic constants, E_{hkl}, ν_{hkl}, are required by Formula (8) to Formula (15). As explained in 7.3, it is possible only in special cases to use the "macroscopic" values of the elasticity modulus and Poisson's ratio, which have been determined by usual mechanical methods. This is because the values of the diffraction elastic constants are likely to depend on the chemical composition and the presence and quantities of other phases and/or lattice defects (e.g. dislocations after plastic deformation). Therefore, preferably, values obtained from diffraction experiments during uniaxial loading should be used[4]. In the case of crystallographic texture, the diffraction elastic constants are orientation dependent and such experiments shall be performed in a sufficient number of directions. If no experimental data can be made available, estimates should be obtained based on appropriate models, see References [3] to [7] and 7.3.

If the required diffraction elastic constants are not available for the specimen material, they may be determined by a uniaxial loading experiment. Since the chemical composition, phase volume fractions, texture, microstructure and even temperature can have an influence on the elastic properties, care shall be taken so that the specimen used in the uniaxial loading test and the specimen under investigation have comparable material characteristics. For the same reason, comparable experimental conditions should be applied in both tests. It is also recommended to use identical data evaluation procedures (e.g. single peak analysis).

The "macroscopic" values of E and ν can be used for cubic and hexagonal phases in texture-free specimens, if the elastic strain is determined by a full pattern analysis.

In the case of a specimen containing texture, modification of these estimates may be needed. The stronger and sharper the texture, the more required is the modification of the elastic constants. It is possible that texture can be taken into account for all crystal systems by measuring the so-called orientation distribution function (ODF) and by introducing it into the calculation of the diffraction elastic constants[10].

9.5 Diffraction data analysis

9.5.1 General

The position of a Bragg peak is determined by fitting a suitable mathematical function to the experimental data. This function simulates the peak shape of the diffracted spectrum including the background. It shall be borne in mind that the accuracy of strain determination can be compromised by an improper consideration of the items listed below and in the Annexes.

9.5.2 Peak fitting function

When a monochromatic beam is used the peak position is normally determined through single peak analysis by fitting a Gaussian function to the data.

© ISO 2019 – All rights reserved

At spallation sources, the peak profile is intrinsically asymmetric. The peak fitting function is normally a convolution of an exponential decay function and a Voigt function.

When a multi-peak spectrum is obtained, a full pattern analysis, such as a Rietveld refinement[2], can be used to extract strains (see A.7.3).

9.5.3 Background function

The function used to fit the background depends on the instrumental set-up and the types of neutron source. Because the slope of a background that varies as a function of the diffraction angle or TOF, and the peak position may be interdependent, care shall be taken in such cases. Unless the background can be determined independently of the peak profile, a fixed gradient should be used. If the background is not constant, the fitting function and its parameters should be stated.

9.5.4 Peak to background ratio

As the ratio of the peak height H to the background B decreases, it becomes more difficult to separate the peak position from effects caused by fitting the background, particularly if the background is not constant.

9.5.5 Distorted peak profiles

Unless proper corrections can be made, reflections with peak profiles that are distorted due to peak overlap or sample effects, such as material inhomogeneities and stacking faults, or due to instrumental effects, should be treated with caution. In the study of multiphase materials, overlapping profiles are sometimes unavoidable. Multiple peak fitting strategies can be used for the analysis based on the procedures described in A.7.

© ISO 2019 – All rights reserved

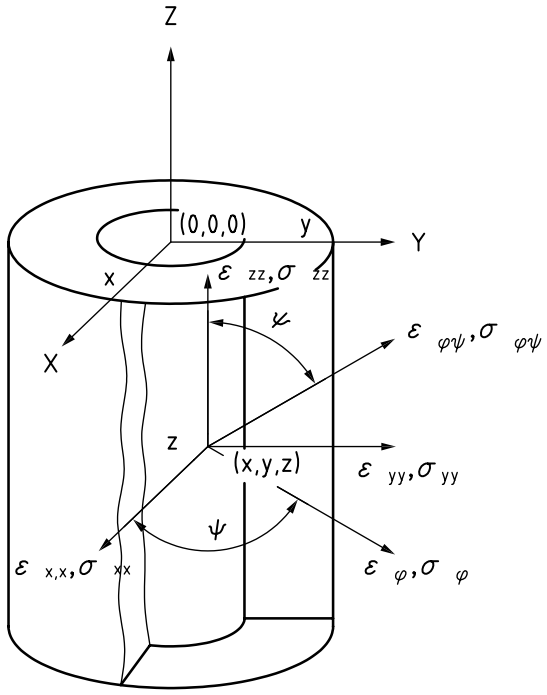

Key

ε_{xx}	normal strain in the direction of X
σ_{xx}	normal stress in the direction of X
ε_{yy}	normal strain in the direction of Y
σ_{yy}	normal stress in the direction of Y
ε_{zz}	normal strain in the direction of Z
σ_{zz}	normal stress in the direction of Z
Φ, Ψ	orientation angles
$\varepsilon_{\Phi\Psi}$	normal strain in the direction defined by the orientation angles Φ and Ψ
$\sigma_{\Phi\Psi}$	normal stress in the direction defined by the orientation angles Φ and Ψ
ε_{Φ}	normal strain in the direction defined by the orientation angle Φ at $\Psi = 90°$
σ_{Φ}	normal stress in the direction defined by the orientation angle Φ at $\Psi = 90°$
(0,0,0)	origin of co-ordinate system (X,Y,Z)

Figure 11 — Stress and strain components at a measurement point (x, y, z) in the specimen co-ordinate system (X, Y, Z)

10 Reliability

The difference between a measurement result and the true value of the measurand comprises contributions from random uncertainties and systematic errors (ISO/IEC Guide 99[46]).

The determination of the uncertainty in a measurement is as important as the result itself, and without it the accuracy of a measurement cannot be estimated. Clause 11 lists the quantities to be reported when stresses and strains are determined by neutron diffraction. Uncertainties should be determined and reported in accordance with ISO/IEC Guide 98-3[26]. Additional guidelines are given in Reference [27]. An abbreviated summary of the nomenclature and method of calculating the combined standard uncertainty of a measurement is given in Annex B.

© ISO 2019 – All rights reserved

11 Reporting

11.1 General

The basic reporting philosophy is to describe the experimental procedure adopted, the results of the measurements and how the data were analysed. Thus, the reader will have sufficient information to reproduce, understand, evaluate and further interpret the results. A rigid reporting format is not put forth as there is great variability in materials, available information and objectives of studies. The exact format and contents of a test report are subject to the agreement between the client and the provider.

11.2 Strain or stress values

11.2.1 General

The strain or stress values resulting from the measurements shall be reported, as follows:

— the strain or stress components and the values determined, including their uncertainties;

— the locations at which the measurements were made, i.e. the centroid of the IGV or the centroid of the SGV as appropriate;

— the size and shape of the IGV or SGV;

— the sources of uncertainties and the way in which they affect the reliability of the results.

11.2.2 Stress-free or reference lattice spacing

The values, uncertainties and method used to obtain the reference or stress-free lattice-spacing(s), or unit cell parameter values for use in determining the relative or absolute strains, shall be described.

11.2.3 Conversion of strain to stress

The relations and assumptions used to convert strain to stress shall be reported.

11.2.4 Elastic constants

If the determined strains are converted to stresses, the values of the diffraction elastic constants used shall be provided and their source stated.

11.2.5 Positioning

The uncertainty in the positioning of the specimen shall be reported and its influence on the strain or stress values shall be estimated.

11.3 Neutron source and instrument

The following information shall be provided:

— the neutron source;

— the instrument at the source;

— the wavelength and the monochromator description (monochromatic instrument) or the wavelength range (TOF instrument);

— the instrument calibration procedure and the calibration measurement results.

 © ISO 2019 – All rights reserved

11.4 General measurement procedures

The following aspects of the measurements shall be reported:

— the methods used to translate and orientate the specimen;

— the method used to locate the surfaces and other reference positions;

— the manner in which the gauge volume(s) is determined;

— the diffraction peak fitting function and the procedure used;

— the methods used to process the data, e.g., smoothing, outlier elimination;

— the method used to demonstrate the reliability of the results.

11.5 Specimens/materials properties

The following aspects of the material being studied should be reported when available:

— the specimen geometry;

— the composition;

— the thermal/mechanical history;

— the phases and crystal structures;

— the homogeneity;

— the sizes and shapes of grains, second phase particles or reinforcements;

— the texture.

11.6 Original data

Original data shall be included in the report if required. Reported data resulting from any smoothing procedure, to which the original data have been subjected, shall be described as such.

11.7 Uncertainties and errors

Those factors contributing to the uncertainties in stress and strain should be quantified and reported in accordance with Clause 10 and as illustrated in Annex B.

In addition, identified sources of systematic errors should be reported together with any measures taken to mitigate their impact.

© ISO 2019 – All rights reserved

Annex A
(informative)

Measurement and analysis methodologies

A.1 General

This annex presents procedures that are used by experienced practitioners to facilitate compliance with this document.

Many of these procedures were clarified within two international pre-normative research projects (VAMAS TWA 20[28][29] and RESTAND[30]). Further information is available in References [31] to [34].

A.2 Specimen co-ordinates

A.2.1 General

For most applications on regularly shaped specimens, rectangular or polar co-ordinates aligned with respect to specimen symmetry features are appropriate.

A.2.2 Specimens with elements of symmetry

Most components have significant elements of symmetry. Many have rectangular, circular or axial features. For such specimens, co-ordinates should be defined relative to the symmetry directions as follows:

a) rectangular specimens: along the orthogonal symmetry directions x, y, z normal to the faces;

b) cylindrical specimens: a cylindrical co-ordinate system that is aligned with the axial, radial and hoop (tangential) directions;

c) extended constant cross-section specimens: rolled, drawn and extruded components may have constant but sometimes complex cross-sections. For extended specimens, co-ordinates parallel to the long axis and along the orthogonal axes are appropriate.

EXAMPLES

Railway rails: longitudinal, transverse and normal.

Rods and pipes: axial, radial and hoop (tangential).

Regular polygonal cross-sections: triangular, square, hexagonal etc.; axial, normal to faces, parallel to faces.

A.2.3 Specimens of an irregular shape

In the general case of a specimen with an irregular shape, co-ordinates should be along three suitable directions, preferably orthogonal. It may be appropriate to employ one co-ordinate system throughout or several systems that are suitable for a series of local scans.

A.3 Positioning of the specimen

A.3.1 General

The specimen should be positioned relative to the reference point of the instrument.

 © ISO 2019 – All rights reserved

A.3.2 The reference point

The reference point position shall be determined as accurately as is practicable, preferably to within 10 % of the minimum dimension of the gauge volume that is to be used.

A.3.3 The gauge volume

It is good practice to position the centroid of the IGV, the reference point, at the centre of rotation of the specimen table. The positioning should be as accurate as is practicable, preferably to within 10 % of the applied gauge volume dimensions. The location of the gauge volume in the measurement plane may be determined from the intensity distribution (wall scans) of scattered neutrons as described in A.5.1.

A.3.4 The specimen

The location and the orientation of the specimen should be described relative to the reference point and to the direction of the scattering vector using appropriate co-ordinates (see A.2). The specimen positioning accuracy should generally be similar to that of the reference point. The specimen position may be determined optically, mechanically, by wall scans, by virtual models, or by combined methods (see also 7.4). To define the specimen position, it is helpful to have a fiducial mark and directions indicated on the specimen. The fiduciary mark should be sufficiently fine and sharp so that the required positioning accuracy can be achieved. If orthogonal translators are used for positioning, they should be accurately orthogonal, preferably to < ±0,1° (±1,7 mrad). Specimen alignment is particularly important when scanning through steep strain gradients and interfaces, surfaces, or when large translation scans are required.

If it is not possible to position the specimen to the required accuracy using optical or mechanical methods, the position of the IGV relative to the specimen surface should be determined using surface (wall) scans. These provide a peak intensity profile, called an “entering curve”, as a specimen surface is translated through the gauge volume that gives an experimental measure of the position of the surface relative to the gauge volume. It is necessary to repeat wall scans for each measurement orientation, and at a number of locations along a surface where there is significant translation parallel to that surface. Care should be taken when surface treated, textured, large grained or highly absorbing materials are probed. In these cases, the entering curve can be substantially different from that expected in the absence of these features.

NOTE 1 The limit of alignment by unaided eye of a skilled experimenter is ≈0,5°, optical or mechanical devices are therefore essential when a more precise alignment is needed.

NOTE 2 Any inaccuracy in positioning the specimen with respect to the reference point will introduce a systematic error in the location where the strain is determined. If the reference point does not coincide with the centre of specimen rotation, a rotation of the specimen will also result in an effective displacement of the gauge volume position relative to the specimen. This can introduce significant errors in stress determination, particularly in cases of steep strain or composition gradients. For example, an uncertainty in positioning Δx leads to a systematic uncertainty in strain $\Delta\varepsilon$ at that point given by $\Delta\varepsilon = (\partial\varepsilon/\partial x)\Delta x$. Thus, a positioning uncertainty of ±50 µm in a region with a strain gradient $\partial\varepsilon/\partial x$ of 2 000 × 10^{-6} per mm will result in a systematic uncertainty of ±100 × 10^{-6} in strain.

A.4 Number and location of diffraction measurement positions

A.4.1 General

The number and location of data points within a specimen should be sufficient to enable significant or specified strain changes to be resolved. The specific number and locations of points will depend upon the detail that is required, the variation in the strain pattern and the size of the gauge volume.

A.4.2 Measurements at one location

In some cases, measurements only at one location may be specified. These measurements are reliable in regions of material and strain uniformity. However, in cases of non-uniformity, interpolation from

© ISO 2019 – All rights reserved

additional measurements in close proximity of the specified location will be needed to assure the reliability in the results.

A.4.3 Strain mapping

For an efficient strain mapping it may be useful to obtain an outline pattern using first a coarse matrix of regularly distributed points and then to increase the point density in the vicinity of the specific features that may be of interest. When the strain gradient or its variation is large along a measurement direction, it may be necessary to increase the mapping density in that direction in order to obtain an adequate spatial resolution.

A.4.4 Material removal to facilitate measurements at difficult locations

The specimen geometry or shape may make it difficult or impossible to perform measurements at particular locations of interest due to beam attenuation or the specimen not fitting on the instrument used. In such cases the user could consider removing the material from the specimen to overcome such limitations. Any modification of the specimen or component can alter or introduce stresses in the region of interest. Significant care shall be taken when alterations are required. This requires careful checking by experimental techniques, such as strain gauges, and/or mathematical methods, such as finite element analysis, to establish to what extent the material removal process causes stress alteration in the region of the intended measurements.

A.5 Gauge volume

A.5.1 IGV determination

Because of beam divergence and other inevitable uncertainties of the experimental set-up, the IGV should be determined experimentally as described in 7.5.

Complete IGV parameters can be obtained by scanning a fine-wire probe through the gauge cross-section. At each scan position, the integrated intensity scattered by the probe is recorded. This is called an intensity profile.

The wire can be a Bragg-scatterer (e.g. steel or copper) or an incoherent scatterer (e.g. nylon). On a monochromatic instrument, it is best to use the former, whilst the latter works very well with a polychromatic beam as on TOF instruments. While scanning through the primary beam, the secondary beam shall be sufficiently wide, and vice versa, not to influence the intensity profile of the former.

These scans yield the intensity profiles and the dimensions, shape and position of the IGV and therefore the position of the reference point (see Figure 9). The shape of the gauge volume depends on the detector angle. Therefore, the Bragg angle of the reflection used for the gauge volume determination should be as close as possible to the angle of the reflection used for the measurement. The dimensions of the probe should be sufficiently small; otherwise attenuation corrections are required.

The IGV intensity profile may be illustrated by means of three 1-dimensional intensity profiles or a 3-dimensional intensity contour map. Such plots also illustrate the level of beam uniformity across the beam width. However, for most practical purposes, the IGV may be described by three dimensions and the diffraction angle. The dimensions quoted should correspond to the FWHMs of the intensity profiles of the incident and diffracted beams. The full widths of the intensity profiles should be provided to give an indication of the sharpness of the IGV boundaries.

A thin metal sheet can be used to map the gauge volume in the scattering plane. It is scanned through the gauge volume, once with its surface normal being parallel to the scattering vector and once with it being perpendicular. The scan direction is given by its surface normal.

 © ISO 2019 – All rights reserved

A.5.2 Alignment of beam-defining optics

The beam-defining optics should be aligned such that the reference point will be in the desired position. To this end the above-described scans and other techniques[35] can be used to perform the necessary corrections in the positioning of the beam-defining optics.

Alternatively, a cylindrical scatterer of the dimensions of the gauge volume can be placed at the preferred gauge volume position and each beam-defining optics component be scanned across its respective beam while recording the intensity profile. The centroid of the profile determines the correct position of the optics component.

The primary beam can also be aligned very efficiently by applying the methods discussed while replacing the scatterer by a narrow slit and placing a detector behind it.

The distances of the incident and diffracted beam-defining optics from the reference point should be set as appropriate. In the case of slits, these distances should be as small as is practicable so that the effects of divergences are minimized, whilst still permitting movement of the specimen with minimal risk of collision when scanning. When radial collimators are used, they should be aligned such that their focus coincides with the reference point.

If the beam positioning reproducibility cannot be guaranteed after a gauge volume change, the gauge positioning procedure shall be repeated.

A.5.3 Gauge dimensions

Gauge dimensions should be chosen so as to permit the detail to be resolved as necessary. If gauge dimensions exceed the size of or distance between features of significance, the detail is lost in the strain patterns.

It is important to describe the beam-defining optics in order to be capable to reproduce the measurement and to estimate the IGV[36].

A.5.4 Grain size

When the size of the grains becomes large relative to the SGV, the statistical sampling can become too small for a reliable determination of an average lattice spacing of grains within the volume contributing to the scattering. For example, at one location in the sample a large grain can make a disproportionately strong contribution to the measured intensity, but if incorrectly oriented, the peak centre will not provide a correct measurement of the lattice spacing, skewing the SGV average. Conversely, at a nearby location, the portion of that grain in the SGV may become small resulting in a negligible contribution.

A very large single grain within the gauge volume can make a very strongly biased contribution to a diffraction peak. This can result in large point-to-point variations in the intensity along a line of measurements that are significantly greater than the calculated uncertainty in the intensity of the individual measurement. Likewise, for a given measurement location, rotation of the sample about the IGV centre will also lead to large angle-to-angle intensity fluctuations if the grains are large, while for sufficiently small grains, the fluctuations will be comparable to the intensity uncertainty and therefore appear smoothly varying, even for a sample with a moderate crystallographic texture.

The solution is to increase the number of contributing grains for good statistical sampling. This can be achieved with a larger SGV, by angular oscillation of the sample about the IGV centre, or spatial oscillation. Normally other factors drive the choice of the IGV, and angular oscillation is more efficient than spatial oscillation.

The angular scan test noted above can be repeated with increasing mitigation measures until the intensity fluctuations are comparable to the uncertainty in the intensity of the individual measurement thereby confirming good statistical sampling of the grains.

Another example of a mitigation technique is the use of a 180° rotation, which can significantly reduce the effect[37].

© ISO 2019 – All rights reserved

A.5.5 Attenuation

Neutron attenuation can cause shifts in the peak position, which unless accounted for could be falsely interpreted as strains. With reference to Figures 8 to 10, it is clear that neutrons scattering from different parts of the gauge volume can have different path lengths. For a specimen with significant attenuation, the centroid of the SGV can be shifted from the centroid of the IGV because more detected neutrons come from the parts of the SGV for which the total path length is shortest. Generally, this is only a concern in reflection geometry (Figure 10) unless the specimen shape itself is asymmetric with respect to the neutron paths.

For monochromatic instruments, as explained above, there is in fact a spread of wavelengths about its mean. Furthermore, this spread of wavelengths is not uniform across the beam in the plane of diffraction. Consequently, the mean wavelength of the diffracted neutrons for highly attenuating materials can be different from the mean wavelength of neutrons in the incident beam. This effect leads to an incorrect determination of the *d*-spacing and thus the strain.

These effects are of particular concern in the case of measurements, which include surfaces and interfaces (see A.6.3)[38].

A.5.6 Counting time

The statistical quality of the data is a function of the number of neutrons counted, which is related to the size of the SGV and the counting time. To minimize counting times and background noise effects, gauge dimensions should be made as large as is practicable, commensurate with spatial resolution, grain size and attenuation considerations.

A.6 Other gauge volume considerations

A.6.1 The SGV and its position

When scanning through surfaces or interfaces the proportion of the IGV occupied by the specimen material (or materials) varies, as does the shape of the occupied portion as the surface or interface is traversed. Consequently, the centroid of the SGV is not at the centroid of the IGV, and erroneous strain values can result. Geometrical corrections for the offset of the SGV centroid from the reference point should be made when scanning through surfaces or interfaces.

Where appropriate, the effect of attenuation should be taken into account for the reasons described in A.5.4.

A.6.2 Instrument induced aberrations

Instrumental characteristics can affect peak shifts. Furthermore, although PSDs record peaks faster than single detectors, their use can introduce errors in the derived strain if the observed data are not properly interpreted. The reason is that the detected peak position is sensitive to the shift of the centroid of the SGV. In contrast, high resolution single detector instruments generally exhibit lower sensitivity to the offset of the centroid of the SGV from the reference point than that of instruments employing PSDs. This is of particular concern in the case of scanning through surfaces and interfaces.

At monochromatic instruments using crystal monochromators, there is a relation between the angle at which a neutron enters the gauge volume and its wavelength. When scanning through surfaces or interfaces, the gauge volume is not fully immersed in the phase under investigation. A slit, used as a beam-defining device of the incident beam, covers a part of the monochromator and therefore reduces the angular range for neutrons to enter the SGV. Therefore, the wavelength-band and the mean wavelength in the SGV change with the measuring position. This leads to changes in the detected peak width and peak position. Errors in the strain induced by this effect can be considerable and can exceed the strain value itself[39].

On the diffracted beam side, a slit can truncate the peak shape, which leads to false detected peak width and peak position.

 © ISO 2019 – All rights reserved

On a TOF instrument, if the centroid of the SGV moves away from the beam axis due to attenuation effects or a non-uniform distribution of diffracting grains within the SGV, there will be an (additional) contribution to the artificial peak shift that results from the appearance of a non-zero net incident beam angle. This effect may be minimised by reducing beam divergence when possible[40][41].

A.6.3 Techniques to reduce aberrations

Slits, used as beam-defining optics, should in general be positioned as close as possible to the gauge volume in order to minimize the above-described instrumental aberrations.

Another way to reduce such aberrations is to introduce a radial focusing collimator in the incident beam of a crystal monochromator instrument. This collimation ensures the same wavelength band at each point in the IGV. Thus, for any measurement position the same mean wavelength is obtained as if the gauge volume were fully immersed. Measurements based on this set-up only suffer from the much smaller geometrical effect, which depends mainly on the dimension of the diffracted beam width[36].

On the diffracted beam side, peak truncation can be avoided by using such a radial collimator. This transmits the diffracted peak on the PSD without distortions and allows peak shape analysis even at surfaces[38].

Another approach to correct for such errors is to simulate the experiment by computer models[42][43]. Although such models are improving, it is always good practice to reduce instrumental errors as much as possible.

A.7 Data analysis

A.7.1 General

For monochromatic beam instruments, the study of single isolated peaks is sought. In this case, fitting the diffraction peak profile with a Gaussian function is generally quite effective. In some cases, only overlapping diffraction peak profiles are available. The analysis of overlapping diffraction peak profiles should be treated with care. The following techniques have been used under appropriate conditions with some success.

A.7.2 Analysis of two overlapping diffraction peaks

In the case of two overlapping peaks, such as are shown in Figures A.1 and A.2, it is sometimes possible to extract an accurate *d*-spacing from a least-squares fit to that part of the data where the peak of interest dominates. In practice, a full analytical peak profile is fitted to a part of an experimental peak profile to estimate the centroid of the full experimental peak profile. Some suggestions have been made concerning the conditions under which such an analysis can be applied[23][44]. Some of the relevant parameters, which affect the reliability of the fit, are the relative FWHMs and intensities of the two peaks, the separation of their centroids and the background level.

While these studies have indicated there are circumstances in which truncated data can be used, or where overlapping peaks that are difficult to distinguish from a single peak, can be analysed, such practices are generally not recommended.

A.7.3 Analysis of several overlapping diffraction peaks

It is possible to fit parts of a diffraction pattern containing several overlapping diffraction peaks by analysing that part of the diffraction pattern. In general, the uncertainty in the result of the fitting procedure is increased and the reliability of the results decreases. However, if some of the fitting parameters can be fixed or related to each other, the reliability can be improved. For instance, if the volume fractions of the phases of a two-phase material and the relative peak intensities in the constituent phases are known, the intensity ratio of their diffraction patterns can be calculated and fixed.

© ISO 2019 – All rights reserved

A.7.4 Full pattern analysis

In situations where multiple diffraction peaks have been recorded, as is routine at a TOF source, it is common practice to carry out a full pattern analysis in addition to, or instead of, a single or multiple peak analysis. A typical full profile analysis method is that originally proposed by Rietveld[2]. In a Rietveld refinement, the crystal structure(s) of the material is (are) assumed, and from this a diffraction pattern is predicted.

The predicted pattern is compared with the measured pattern and the crystal structure is varied in a least squares procedure in order to optimise the agreement between the measured and the calculated patterns. It has been shown that this procedure gives an adequately small residual stress in tensile bars after unloading from the plastic region to several percent plastic strain and is suitable for determining residual stresses for engineering purposes[4][45] (see also Figure 7).

The advantage of a full pattern analysis is that by simultaneously fitting the entire pattern, a lower uncertainty in the parameter values determined can be obtained, compared to fitting individual diffraction peaks. In addition, information on the microstructure can be obtained, such as the presence of texture, volume fractions of phases and strain anisotropy. This requires the inclusion of appropriate models that incorporate the microstructure into the refinement procedure. Finally, it is observed that the lattice parameter obtained by a Rietveld refinement is generally insensitive to the plastic anisotropy effects described in 7.3.

When using a Rietveld refinement, the elastic constants for the determination of stress from strain are the macroscopic Young's modulus and Poisson's ratio adjusted to account for the texture present.

A.8 Temperature measurement and recording

Lattice spacing is affected not only by the stress, but also by the temperature. Thermal expansion is a property characteristic to each material and a change in the temperature results in a "thermal strain", which is indistinguishable from a mechanical strain. The linear coefficient of thermal expansion, α, for many engineering materials lies within the range of ca.10 × 10^{-6} K^{-1} to 20 × 10^{-6} K^{-1}. Thus, temperature variations of as little as 5 °C to 10 °C could induce a strain in the range of 50× 10^{-6} to 200 × 10^{-6}. Therefore, in strain determination by neutron diffraction it is important to monitor and control the temperature such that variations do not cause significant changes in the lattice dimensions.

NOTE Temperature variations can also have an influence on the performance of the measuring equipment.

A.9 Macroscopic material anisotropy

In the case of samples with an anisotropic macroscopic behaviour, the applicable generalised Hooke's law is expressed by Formula (A.1):

$$\begin{aligned}
\sigma_x &= \frac{E_x}{A'}\cdot\left[\left(1-\nu_{zy}\cdot\nu_{yz}\right)\varepsilon_x-\left(\nu_{yx}+\nu_{zx}\cdot\nu_{yz}\right)\varepsilon_y+\left(\nu_{zx}+\nu_{yx}\cdot\nu_{zy}\right)\varepsilon_z\right]\\
\sigma_y &= \frac{E_y}{A'}\cdot\left[\left(\nu_{xy}+\nu_{zy}\cdot\nu_{xz}\right)\varepsilon_x+\left(1-\nu_{xz}\cdot\nu_{zx}\right)\varepsilon_y+\left(\nu_{zy}+\nu_{zx}\cdot\nu_{xy}\right)\varepsilon_z\right]\\
\sigma_z &= \frac{E_z}{A'}\cdot\left[\left(\nu_{xz}+\nu_{xy}\cdot\nu_{yz}\right)\varepsilon_x+\left(\nu_{yz}+\nu_{yx}\cdot\nu_{xz}\right)\varepsilon_y+\left(1-\nu_{xy}\cdot\nu_{yx}\right)\varepsilon_z\right]
\end{aligned} \tag{A.1}$$

where $A' = 1 - \nu_{zy}\,\nu_{yx}\,\nu_{xz} - \nu_{zx}\,\nu_{xy}\,\nu_{yz} - \nu_{zx}\nu_{xz} - \nu_{zy}\nu_{yz} - \nu_{yx}\nu_{xy}$.

 © ISO 2019 – All rights reserved

In the case of transverse isotropy with respect to the x-axis this implies:

$$E_z = E_y\,;\ \nu_{xz} = \nu_{xy}\,;\ \nu_{zy} = \nu_{yz}\,;\ \nu_{zx} = \nu_{yx};$$

and then Formula (A.1) becomes Formula (A.2):

$$\sigma_x = \frac{E_x}{A}\cdot\left[\left(1-\nu_{zy}\right)\varepsilon_x + \nu_{zx}\left(\varepsilon_y + \varepsilon_z\right)\right]$$

$$\sigma_y = \frac{E_y}{A}\cdot\left[\nu_{xz}\varepsilon_x + \frac{\left(1-\nu_{xz}\nu_{zx}\right)}{1+\nu_{zy}}\varepsilon_y + \frac{\left(\nu_{xz}\nu_{zx}+\nu_{zy}\right)}{1+\nu_{zy}}\varepsilon_z\right] \tag{A.2}$$

$$\sigma_z = \frac{E_y}{A}\cdot\left[\nu_{xz}\varepsilon_x + \frac{\left(\nu_{xz}\nu_{zx}+\nu_{zy}\right)}{1+\nu_{zy}}\varepsilon_y + \frac{\left(1-\nu_{xz}\nu_{zx}\right)}{1+\nu_{zy}}\varepsilon_z\right]$$

where $A = 1 - \nu_{zy} - 2\nu_{zx}\nu_{xz}$.

If we use diffraction elastic constants, all the above constants need to carry an *hkl* index.

See 9.4 for the choice of the elastic constants.

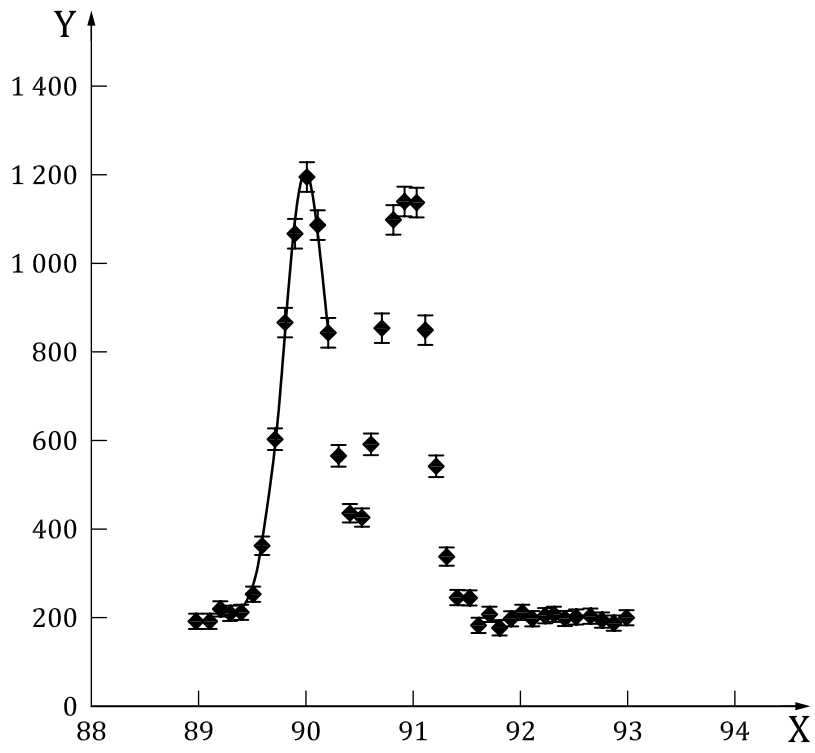

Key

X	2θ
Y	count
◆	simulated data
——	fitted result

Figure A.1 — Example of peaks with little overlap, where the peak profile parameters can be determined independently

© ISO 2019 – All rights reserved

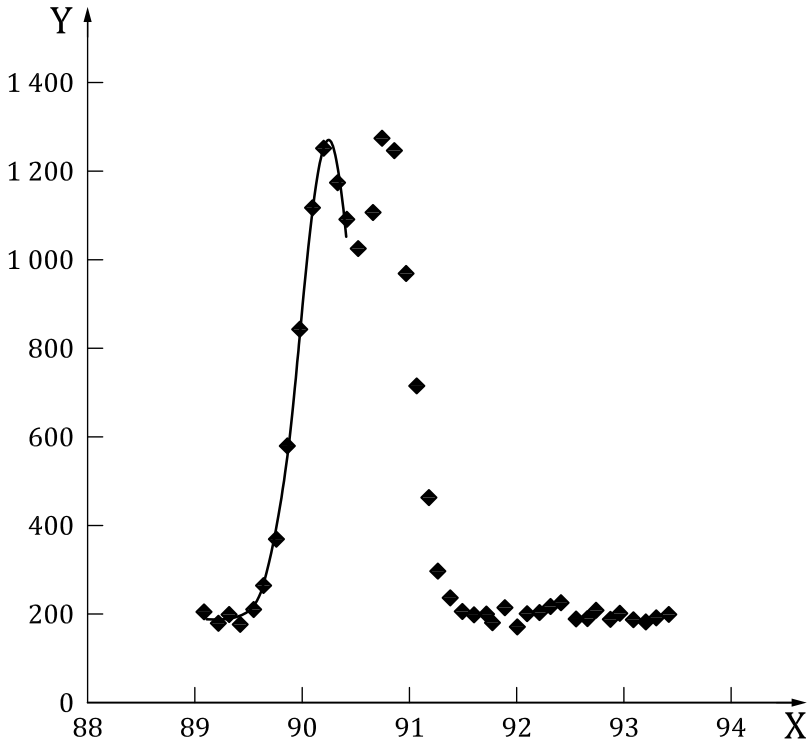

Key

X	2θ
Y	count
◆	simulated data
——	fitted result

Figure A.2 — Example of diffraction peaks with extensive overlap, where the peak profile parameters may not be determined independently

© ISO 2019 – All rights reserved

Annex B
(informative)

Determination of uncertainties in a measurand

B.1 Introduction

The uncertainty in a measured parameter is an estimate of the lack of knowledge in the true value of the parameter. There are many possible sources of uncertainty, after corrections for known systematic effects have been made.

The experimenter shall make an assessment of the potential contributions to the uncertainty in the measurement. If the assessment suggests that the contribution could have a significant influence on the uncertainty, it shall be reported and the uncertainty should be estimated. A detailed description of the determination of uncertainty is given in References [26] and [27].

The accumulated value of uncertainty u in an estimated parameter y is obtained from the values of all the independent uncertainties $u(x)$ contributing to the measurement, as is shown in Formula (B.1):

$$u^2(y)=\sum_{i=1}^{N}\left(\frac{\partial y}{\partial x_i}\right)^2 u^2(x_i) \tag{B.1}$$

where

x_i are the N parameters, on which y depends;

N is the number of parameters, and

u^2 is the variance.

B.2 Uncertainty in stress determination

Stress depends on strain and elastic constants (see Clause 9). Therefore the uncertainties in strain and the elastic constants are needed for the estimation of the uncertainty in the stress value reported.

For instance, the variance of the stress component (σ_{xx}) computed from Formula (8) is given by Formula (B.2):

$$u^2(\sigma_{xx})=\left(\frac{\partial\sigma_{xx}}{\partial\varepsilon_{xx}}\right)^2 u^2(\varepsilon_{xx})+\left(\frac{\partial\sigma_{xx}}{\partial\varepsilon_{yy}}\right)^2 u^2(\varepsilon_{yy})+\left(\frac{\partial\sigma_{xx}}{\partial\varepsilon_{zz}}\right)^2 u^2(\varepsilon_{zz})+ \left(\frac{\partial\sigma_{xx}}{\partial E_{hkl}}\right)^2 u^2(E_{hkl})+\left(\frac{\partial\sigma_{xx}}{\partial\nu_{hkl}}\right)^2 u^2(\nu_{hkl}) \tag{B.2}$$

B.3 Uncertainty in strain determination

Factors, which may affect the uncertainty in the determined strains, include:

— uncertainty in the measurement of d, θ or t and their respective stress-free (d_0, θ_0 or t_0) or reference values (d_{ref}, θ_{ref} or t_{ref});

— uncertainty in the wavelength of the incident beam;

© ISO 2019 – All rights reserved

— variations in the temperature or chemical composition of the specimen as a function of position or time;

— uncertainty in the measurement position within the specimen.

Causes of these uncertainties include: movement of the optical components or detector, non-uniformity in the wavelength of the incident beam, attenuation in the specimen, incomplete filling of the gauge volume and temperature variations.

Based on Formula (B.1) the estimated variance in strain $u^2(\varepsilon)$ is given by Formula (B.3):

$$u^2(\varepsilon)=\sum_{i=1}^{N}\left(\frac{\partial\varepsilon}{\partial x_i}\right)^2 u^2(x_i) \tag{B.3}$$

where

x_i are the N parameters, which have influence on the strain, and

u^2 are their estimated variances.

Based on Formula (2), Formula (B.3) yields Formula (B.4):

$$u(\varepsilon)^2=\frac{u(d)^2}{d_0{}^2}+\frac{u(d_0)^2}{d_0{}^2}\approx\frac{u(d)^2}{d^2}+\frac{u(d_0)^2}{d_0{}^2} \tag{B.4}$$

NOTE If the same reference is used to determine a series of strains, their *relative* uncertainties are given simply by Formula (B.5):

$$u(\varepsilon)^2\approx\frac{u(d)^2}{d^2} \tag{B.5}$$

That is, when determining relative uncertainties, the uncertainty in the reference is not included in the calculation of the uncertainty in strain. Instead it should be reported separately as an uncertainty of the "zero point" of the strain scale. Thus, the relative changes in strain are better defined than the absolute values of strain, which is made clear by reporting the uncertainties separately.

B.4 Uncertainty in the lattice spacing

Using Bragg's law [Formula (1)], Formula (B.1) yields Formula (B.6):

$$u(d)^2=\left(\frac{\partial d}{\partial\lambda}\right)^2 u(\lambda)^2+\left(\frac{\partial d}{\partial\theta}\right)^2 u(\theta)^2 \tag{B.6}$$

Moreover, the uncertainty in position x and temperature T can also influence the uncertainty in the observed lattice spacing. Thus, the estimate of the total uncertainty in the measured lattice spacing becomes as shown in Formula (B.7):

$$u(d)^2=\left(\frac{\partial d}{\partial\lambda}\right)^2 u(\lambda)^2+\left(\frac{\partial d}{\partial\theta}\right)^2 u(\theta)^2+\left(\frac{\partial d}{\partial T}\right)^2 u(T)^2+\left(\frac{\partial d}{\partial x}\right)^2 u(x)^2 \tag{B.7}$$

For cubic materials it is allowed to replace the lattice spacing d with the lattice parameter a in Formulae (B.6) and (B.7).

The contribution from the uncertainty in the temperature to the uncertainty in d is proportional to the coefficient of thermal expansion α of the material.

A contribution from the uncertainty in the positioning may be significant in regions of high strain gradient and a series of measurements may be required for that to be assessed.

 © ISO 2019 – All rights reserved

B.5 Example

Based on the analysis above, the cumulative uncertainty in strain is calculated below for a hypothetical measurement on an aluminium specimen:

— a diffraction peak in aluminium is measured to be at θ = 39,850° ± 0,008°. The uncertainty of 0,008° is that obtained from the least squares peak fitting routine;

— the reference peak position is 39,900° ± 0,005°;

— the wavelength is 0,300 00 ± 0,000 01 nm. This 0,000 01 nm uncertainty is believed to include all instrumental uncertainties;

— the uncertainty in the temperature during the d measurement is ±3 °C;

— the uncertainty in the temperature during the d_0 measurement is ±1 °C;

— the uncertainty in the position of the specimen is ±0,10 mm in each of the x, y and z directions;

— the strain gradient g is estimated to be 500 × 10^{-6} mm^{-1} in the x direction, and negligible in the y and z directions;

— the coefficient of thermal expansion, α is 24 × 10^{-6} °C;

— for this particular experiment, all other effects have been assessed as having a negligible influence on the measurements.

In this case Formula (B.7) becomes Formula (B.8):

$$\frac{u(d)^2}{d^2} = \left[\frac{u(\lambda)}{\lambda}\right]^2 + [u(\theta)\cot\theta]^2 + [u(T)\alpha]^2 + [u(x)g]^2 \tag{B.8}$$

while for the independently measured d_0 we find for u (d_0):

$$\frac{u(d_0)^2}{d_0{}^2} = \left[\frac{u(\lambda)}{\lambda}\right]^2 + [u(\theta_0)\cot\theta_0]^2 + [u(T)\alpha]^2 \tag{B.9}$$

The strain gradient term is absent in Formula (B.9) as a d_0 measurement should not be allowed at a location exhibiting either strain or strain gradients.

Calculating the strain from Formula (2) and the uncertainty from Formulae (B.4), (B.8) and (B.9), the example yields a strain of 1 045 ± 222 × 10^{-6}. The uncertainty in the strain is 192 × 10^{-6} if the uncertainty in the reference measurement is not included in the calculation [Formulae (B.5) and (B.8)].

© ISO 2019 – All rights reserved

Bibliography

[1] Sears V.F., Neutron News, **3**, No. 3, 26-37, (1992)

[2] Rietveld H. M., J. Appl. Cryst., **2**, 65-71 (1969)

[3] Hsu T.C., Marsiglio F., Root J.H., Holden T.M., J. Neutron Res., **3**, 27-39, (1995)

[4] Ezeilo A.N., Webster G.A., P.J.Webster and X.Wang, Physica B, 180&181,1044-1046, (1992)

[5] Reuss Z., angew. Math. Mech., **9**, 49-58 (1929)

[6] Voigt W., Lehrbuch der Kristallphysik, Teubner, Berlin, (1910)

[7] Neerfeld H., Mitt. K. W. I. Eisenforsch., Düsseldorf, 24, 61-70 (1942)

[8] Hill R., Proc. Phys. Soc. (London) **A65** (1952) 349-354

[9] Kröner E., Zeitschrift fuer Physik, **151**, 504-518, (1958)

[10] van Houtte P., de Buyser L., Acta Metall. Mater., Vol. **41**, No. 2, 323-336 (1993)

[11] Kocks U. F., Tomé C. N., Wenk H.-R., Texture and Anisotropy, Cambridge (1998)

[12] Krawitz A.D., Winholtz R.A.“, Use of position-dependent stress-free standards for diffraction stress measurements”, Materials Science and Engineering: A, Volume **185**, Issues 1–2, September 1994, pp. 123-130

[13] Ohms C., Youtsos A.G., Idsert P. v.d., Timke Th., Materials Science Forum, Vol. **347-349** (2000), pp. 658-663

[14] Holden T. M., Clarke A. P., Holt R. A., Met. Trans., **28A**, 2565-2576 (1997)

[15] Clausen B., Lorentzen T., Bourke M. A. M., Daymond M. R., Mat. Sci. Eng. **259**, 17-24 (1999)

[16] Clausen B., PhD Thesis, Risø-R-985(EN) Thesis, Risø National Laboratory, (1997)

[17] Pang J. W. L., Holden T. M., Mason T. E., Acta Mater., **46**, 1503-1518 (1998)

[18] Pang J. W. L., Holden T. M., Mason T. E., Strain Analysis J., Vol. 33, No.5, 373-384, 1998

[19] Pang J.W.L., Holden T.M., Mason T.E., Proceedings of ICRS-5, Linköping, Sweden, Vol. 2, 610-615, 1997

[20] Daymond M. R., Bonner N W, Mat. Science and Eng. A, Vol. **340**, Issue 1-2, 263-271 (2002)

[21] Daymond M. R., Bourke M. A. M., Von Dreele R. B., J. App. Phys., **85**, 739-747(1999)

[22] James J.A., Santisteban J.R., Edwards L., Daymond M.R.“, A Virtual Laboratory for Neutron and Synchrotron Strain Scanning”, Physica B, Condensed Matter (2004) **350**, pp.743-746

[23] Hutchings M., Withers P., Holden T., Lorentzen T., Introduction to the Characterization of Residual Stress by Neutron Diffraction, Taylor & Francis, CRC Press, Boca Raton, London, New York, Singapore, ISBN 0-415-31000-8 (2005)

[24] Withers P.J., Preuss M., Steuwer A., Pang J.W.L.“, Methods for obtaining the strain-free lattice parameter when using diffraction to determine residual stress “, J. Appl. Cryst. **40**, issue 5, (2007), pp. 891–904

[25] Dölle H., J. Appl. Cryst, **12**,489-501 (1979)

 © ISO 2019 – All rights reserved

[26] ISO/IEC Guide 98-3, *Uncertainty of measurement — Part 3: Guide to the expression of uncertainty in measurement (GUM:1995)*

[27] Taylor B.N., Kuyatt C.E., "Guidelines for Evaluating and Expressing the Uncertainty of NIST Measurement Results", NIST Technical Note 1297 1994; see also http://physics.nist.gov/cuu/Uncertainty/index.html

[28] VAMAS report No 38 'Neutron diffraction measurements of residual stress in a shrink-fit ring and plugWebster G.A., (Ed.), NPL, Teddington, UK, Jan 2000

[29] Polycrystalline materials – Determination of residual stresses by neutron diffraction ISO/TTA 3 Sept. 2001, ISO, Geneva

[30] Residual Stress Standard using Neutron Diffraction, Final Report of European project RESTANDYoutsos A.G., (editor), April 2002

[31] Measurement of Residual and Applied Stress Using Neutron Diffraction, NATO Asi Series. Series E, Applied Sciences, No 216, Michael T. Hutchings, Aaron D. Krawitz (Eds.), Kluwer Academic Publishers; 1992

[32] Introduction to Diffraction in Materials Science and Engineering, Aaron D. Krawitz, John Wiley & Sons; 2001

[33] Analysis of Residual Stress by Diffraction using Neutron and Synchrotron Radiation, Alain Lodini, Michael Fitzpatrick (Eds.), Taylor and Francis; 2003

[34] Noyan I.C., Cohen J.B., Residual Stress — Measurement by Diffraction and Interpretation Springer-Verlag, New York, (1987)

[35] Brand P.C., Prask H.J., J. Appl. Cryst. **27** (1994), pp. 164-176

[36] Pirling T., Materials Science Forum Vols **321-324** (2000), pp. 206-211

[37] Holden T.M., Traore Y., James J., Kelleher J., Bouchard P.J., J. Appl. Cryst., **48**, 582-584 (2015)

[38] Pirling T., Materials Science Forum **347-349** (2000) pp. 207-212

[39] Webster P.J., Mills G., Wang X.D., Kang W.P., Holden T.M., J. Neutron Res., **3**, 223-240, (1996)

[40] Suzuki H., Harjo S., Abe J., Xu P., Aizawa K., Akita K.", Effects of gauge volume on pseudo-strain induced in strain measurement using time-of-flight neutron diffraction", Nuclear Instruments and Methods in Physics Research, A **715** (2013) pp. 28–38

[41] Suzuki H., Harjo S., Abe J., Akita K.", Influence of beam divergence on pseudo-strain induced in time-of-flight neutron diffraction", Materials Science Forum, **777** (2014) pp. 105–111

[42] Pluyette E., Sprauel J.M., Lodini A., Perrin M., Todeschini P., Residual stresses evaluation near interfaces by means of neutron diffraction: modelling a neutron spectrometer, Proceedings of the ECRS-4, S. Denis et al. (eds), Cluny, June (1996), pp. 153-163

[43] Šaroun J., Rebelo Kornmeier J., Hofmann M., Mikula P., Vrána M.", Analytical model for neutron diffraction peak shifts due to the surface effect " J. Appl. Cryst. **46** (2013), pp. 628–638

[44] Pang J., Withers P.J., in: Residual Stress Standard using Neutron Diffraction, 3rd Annual Progress Report, Youtsos A.G., (editor), July 2001, pp. 49-55

[45] Daymond M. R., Bourke M. A. M., Von Dreele R. B., Clausen B., Lorentzen T., J. Appl. Phys., **82**, 1554-1562 (1997)

[46] ISO/IEC Guide 99:2007, *International vocabulary of metrology — Basic and general concepts and associated terms (VIM)*

© ISO 2019 – All rights reserved

ICS 19.100

Price based on 45 pages

© ISO 2019 – All rights reserved